JANUARY 1957 PARTS LIST No. 7500-F

KODASCOPE PAGEANT SOUND PROJECTOR

MAGNETIC-OPTICAL, MODEL MK4

STARTING WITH SERIAL No. 65001

This list also includes the Kodak 35-Ft Speaker Extension Cord and the Kodak De Luxe Speaker Unit, Model A.

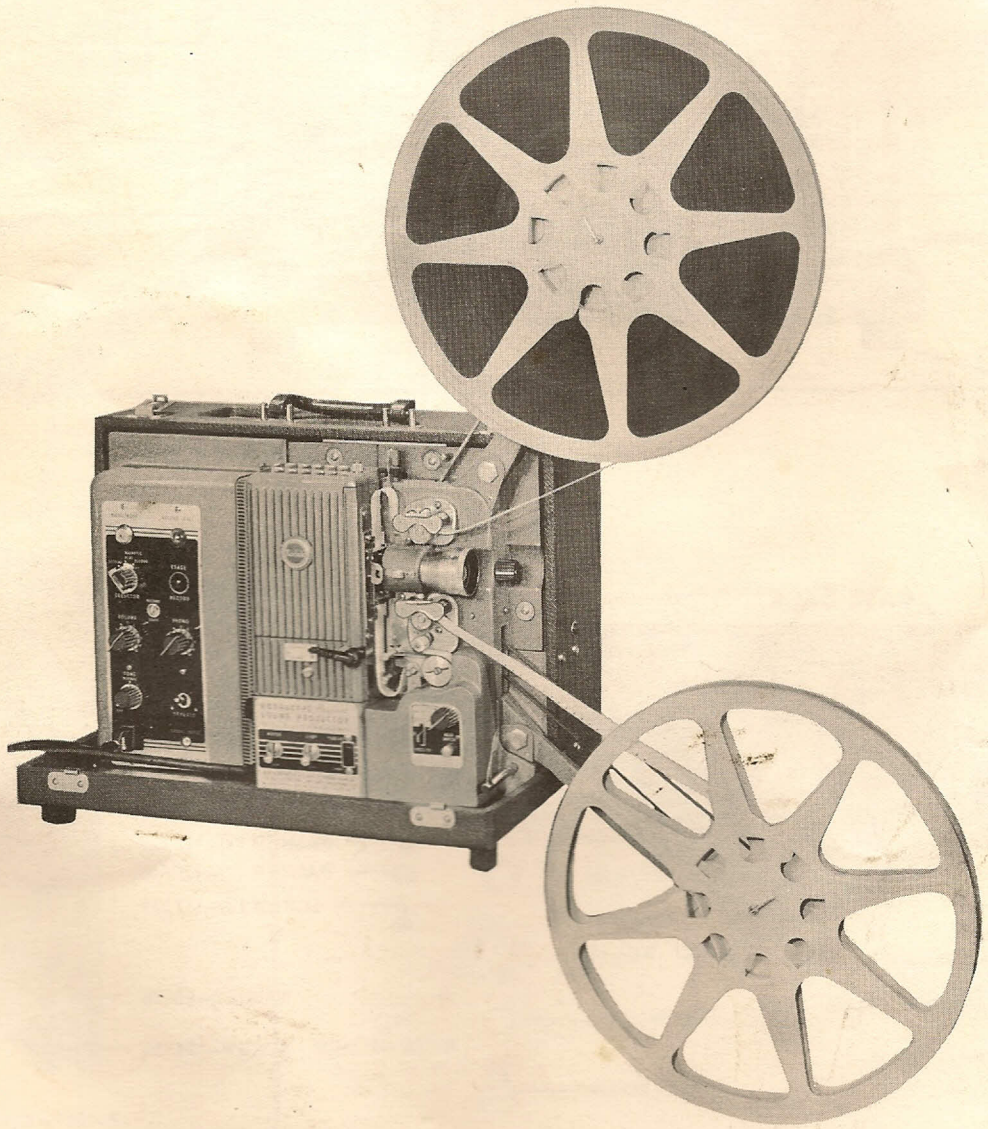

Order parts from | Eastman Kodak Company, Apparatus Parts Service
800 Lee Road, Rochester, New York 14650

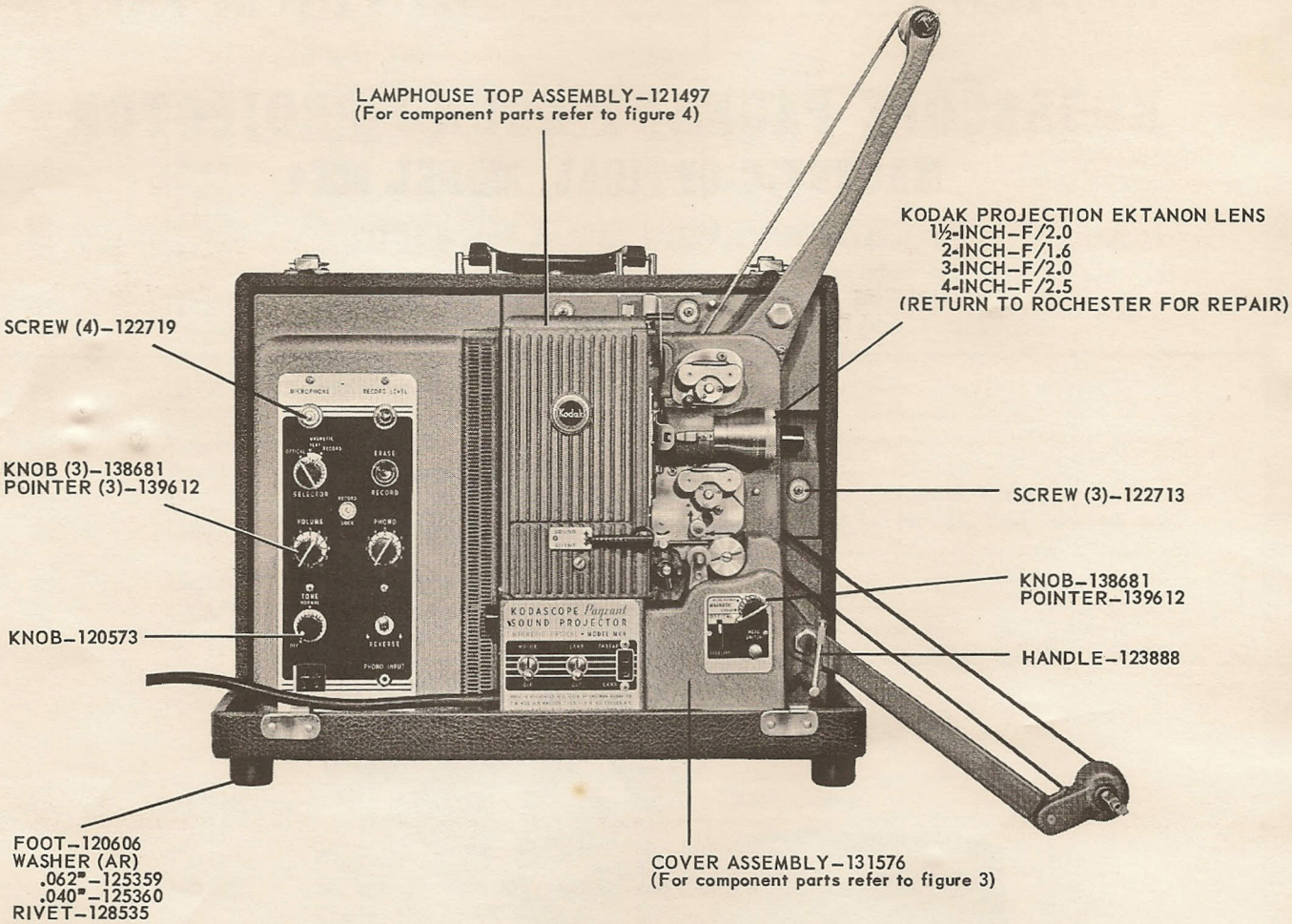

CASE BACK

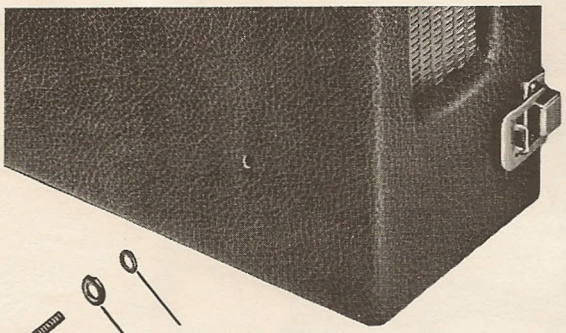

WASHER–138229

WASHER–120446

SCREW–124762

CASE BOTTOM

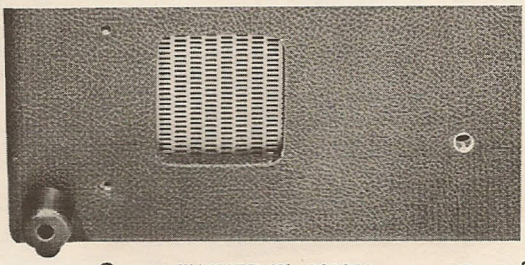

WASHER (2)–138229

WASHER (2)–120446

SCREW (2)–117229

SLEEVE–124404
(Inside case)

(Inside case)

GROMMET (2)–125854

WASHER–85876

SCREW–124355

FIGURE 1

Always give PART NUMBER and NAME when ordering parts

T.M. Reg. U.S. Pat. Off.

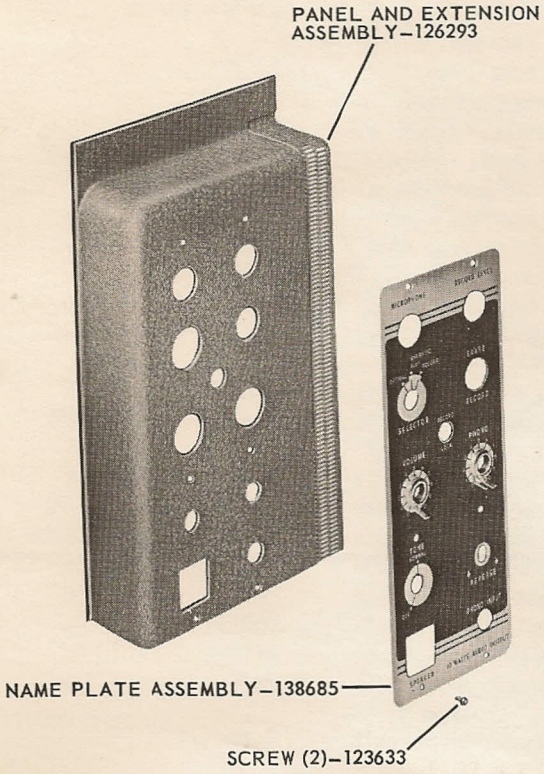

FIGURE 2

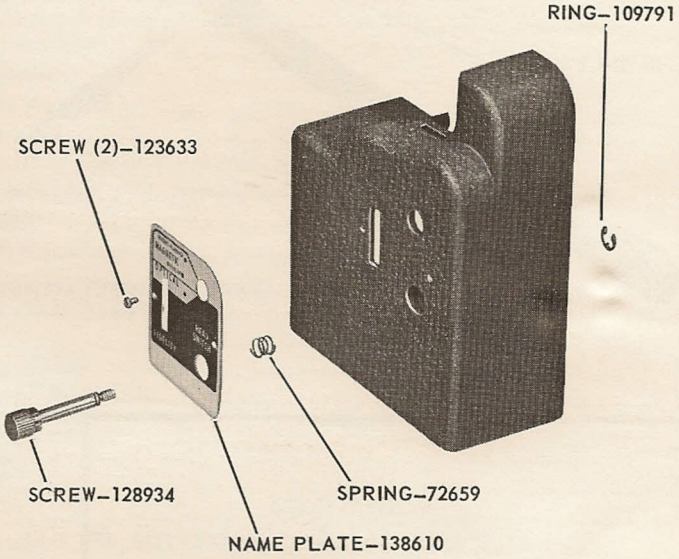

FIGURE 3

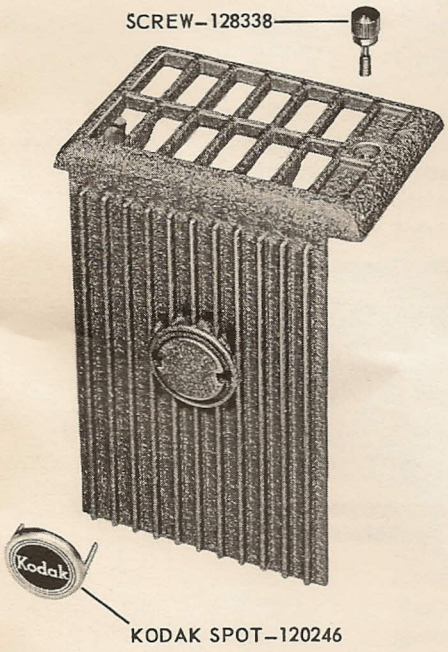

FIGURE 4

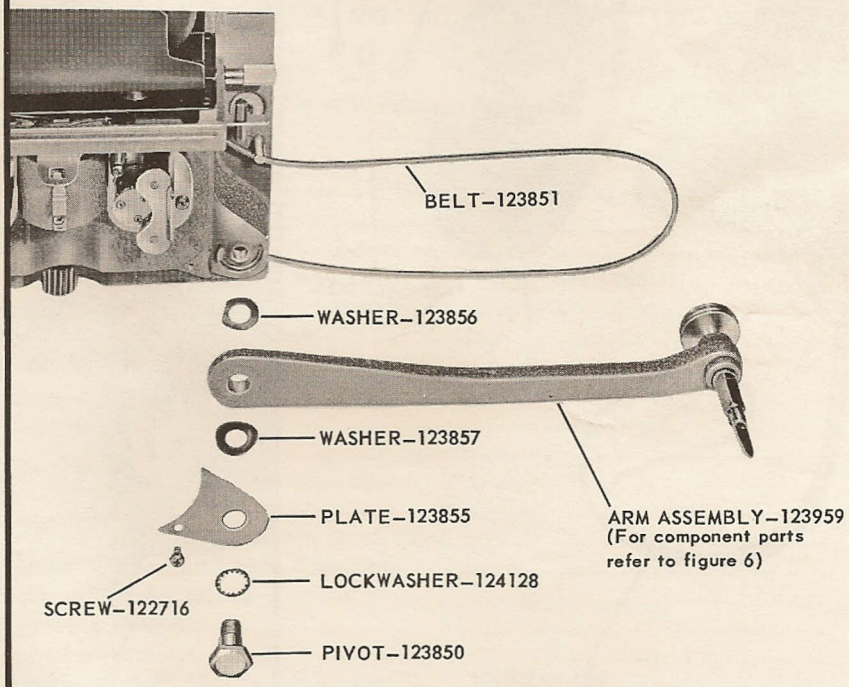

FIGURE 5

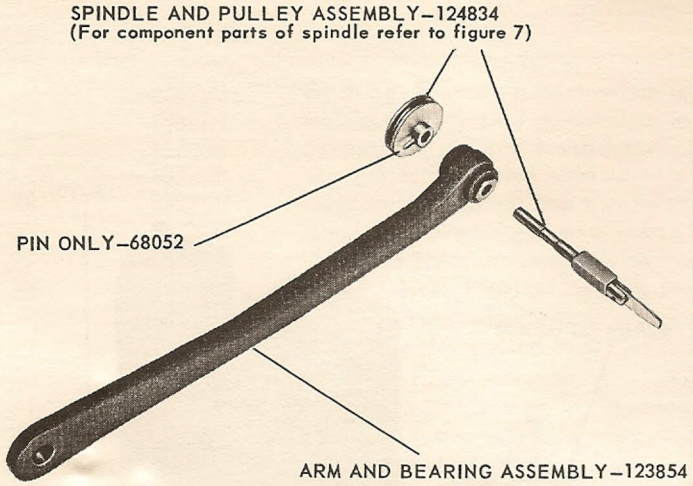

FIGURE 6

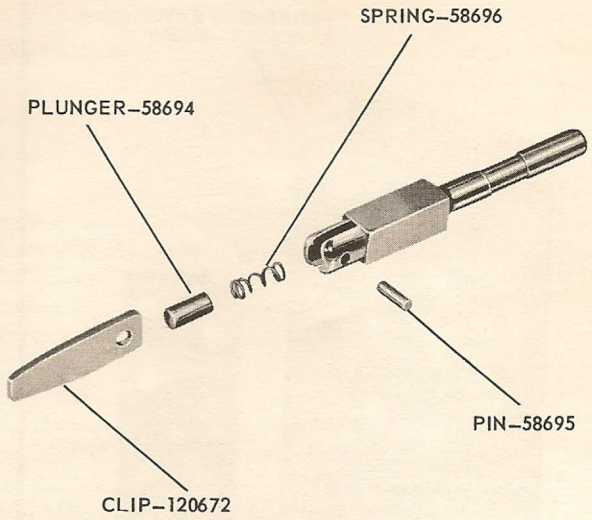

FIGURE 7

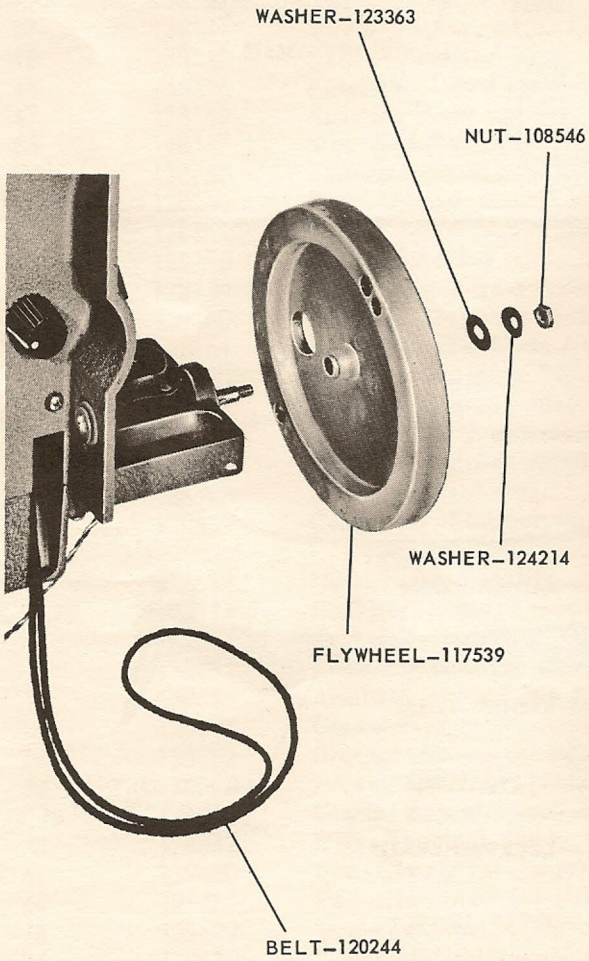

FIGURE 8

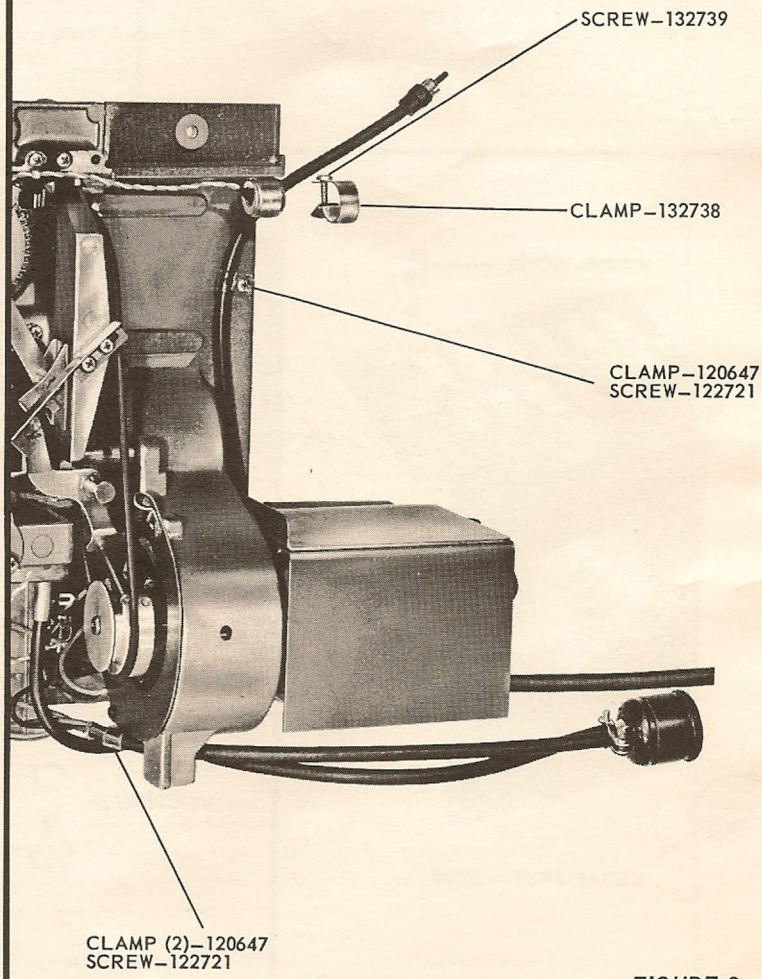

FIGURE 9

Always give PART NUMBER and NAME when ordering parts

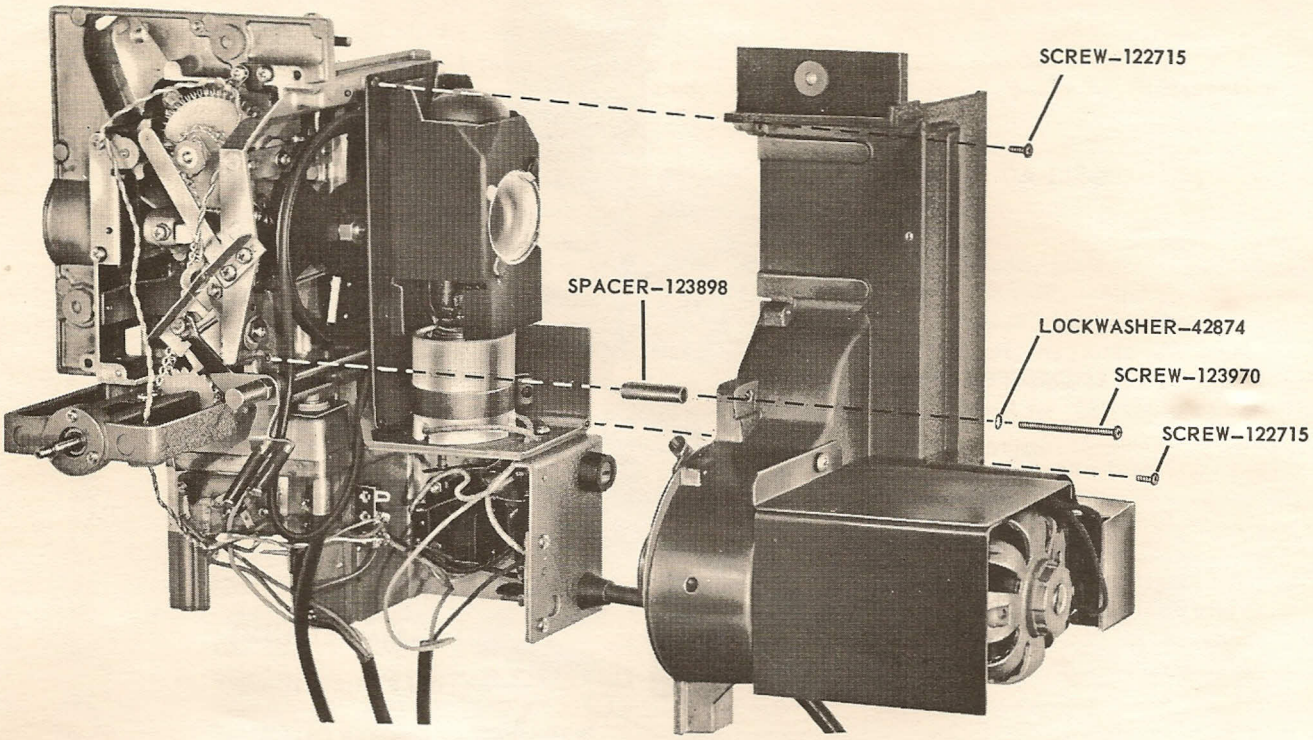

FIGURE 10

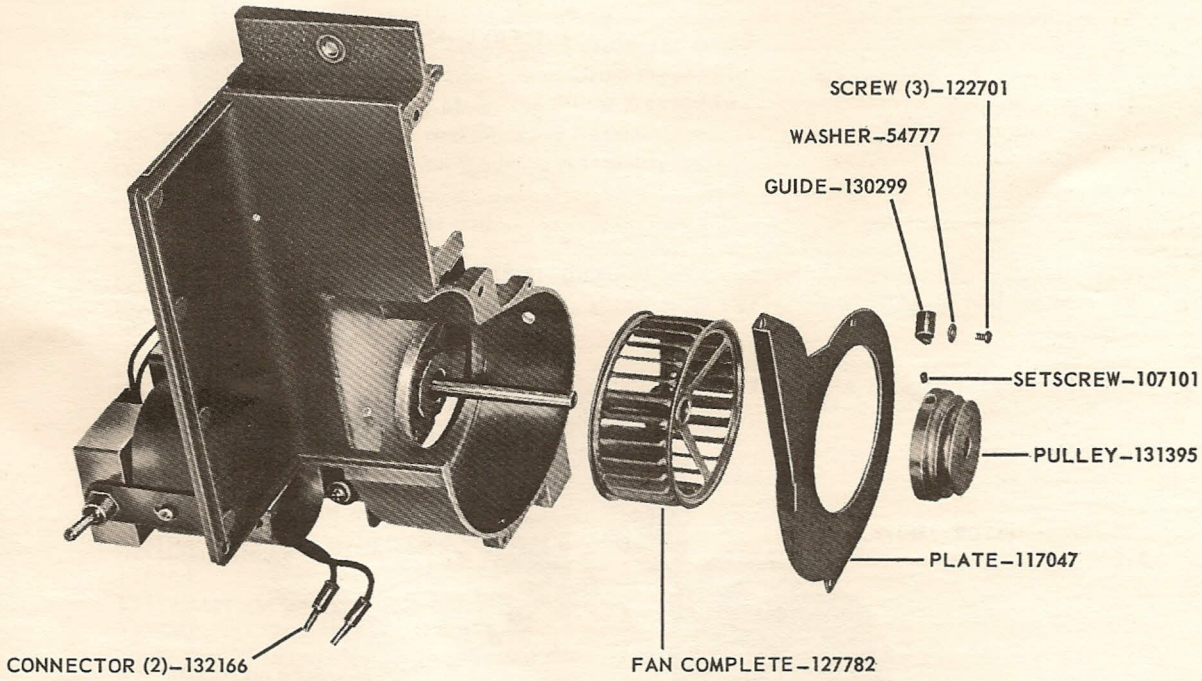

FIGURE 11

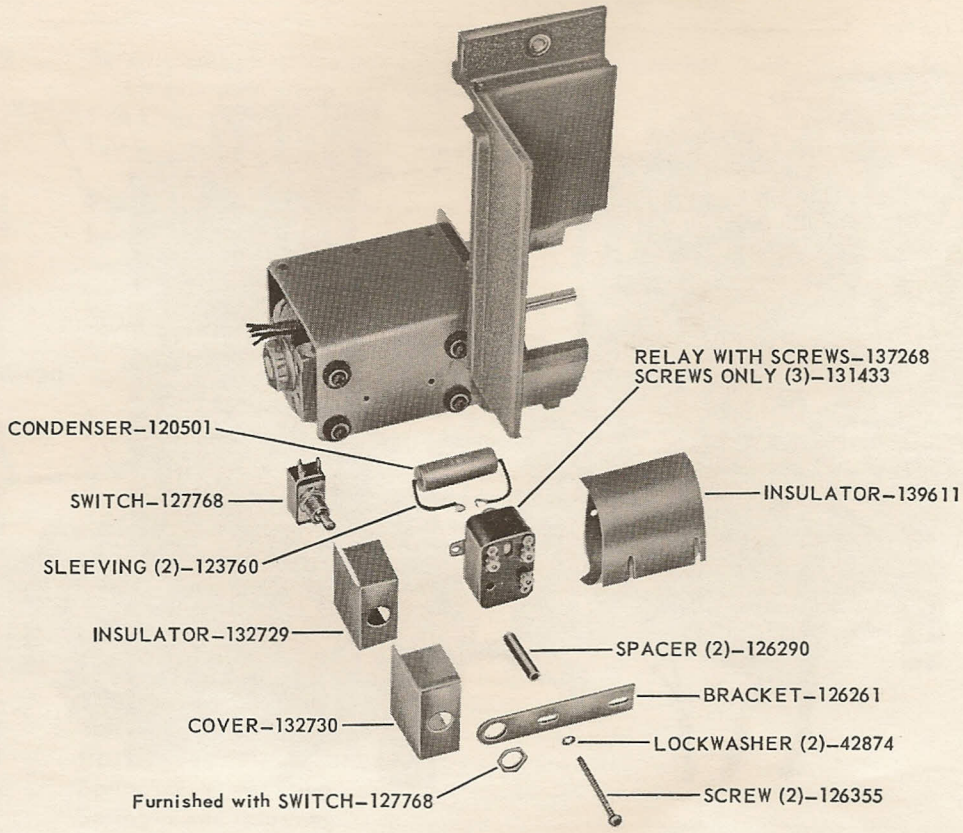

FIGURE 12

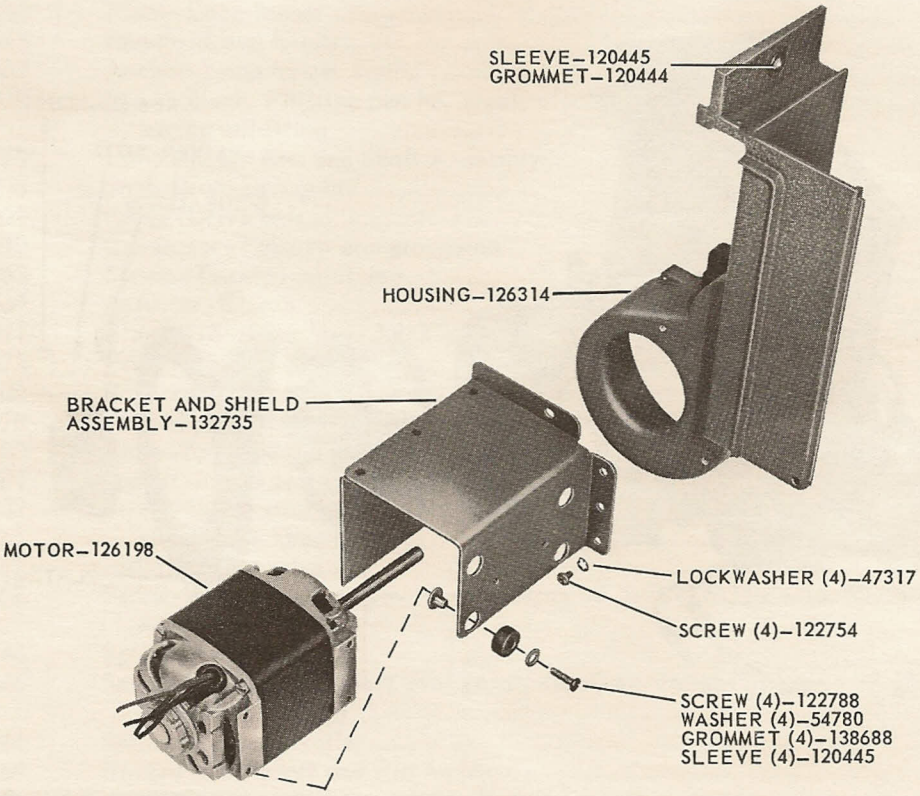

FIGURE 13

Always give PART NUMBER and NAME when ordering parts

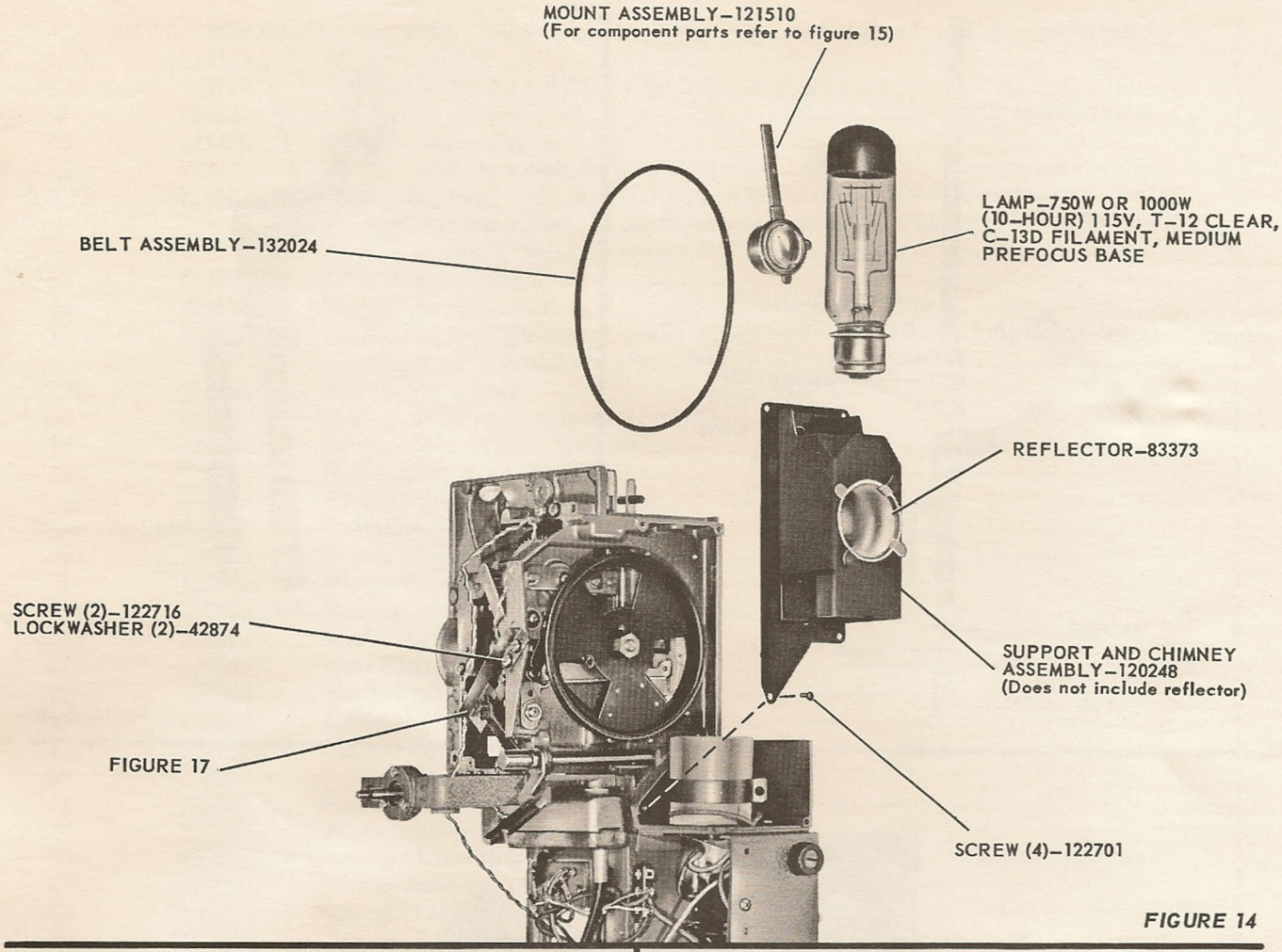

FIGURE 14

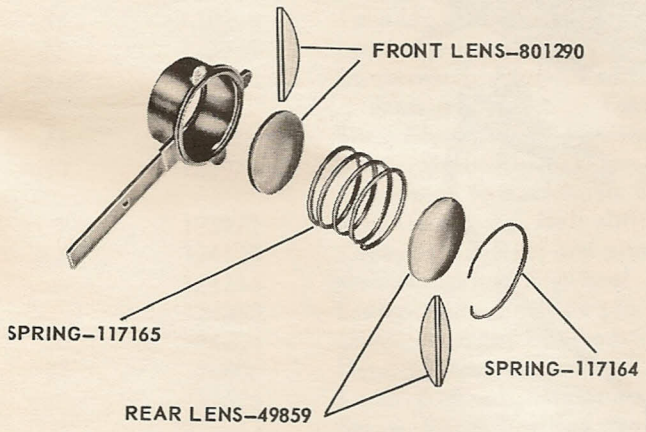

FIGURE 15

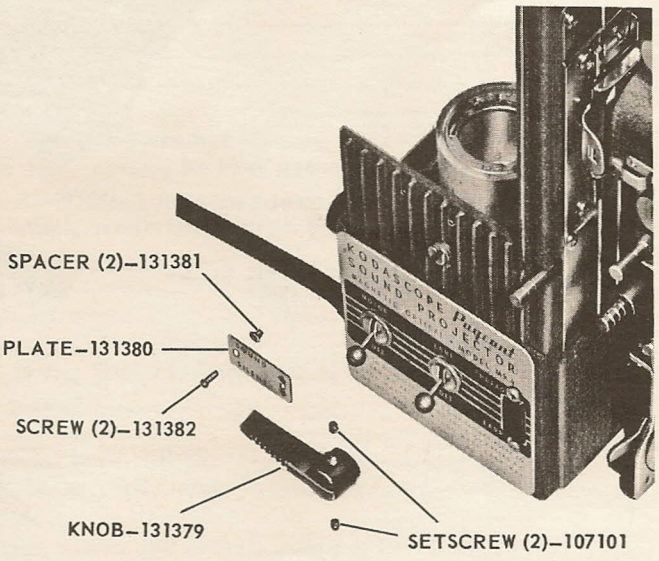

FIGURE 16

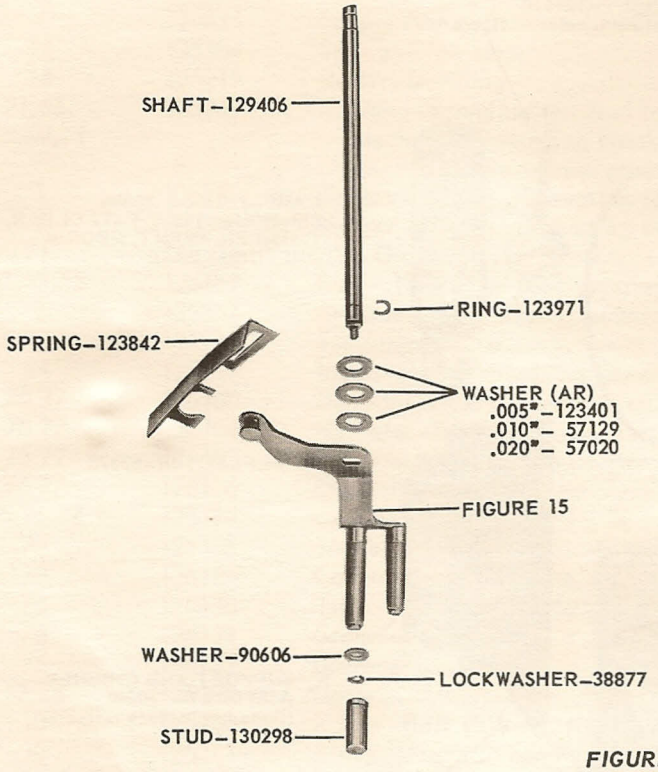

FIGURE 17

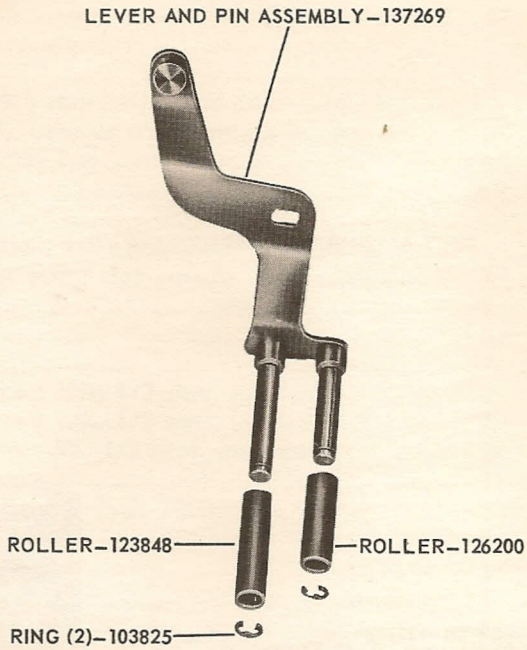

FIGURE 18

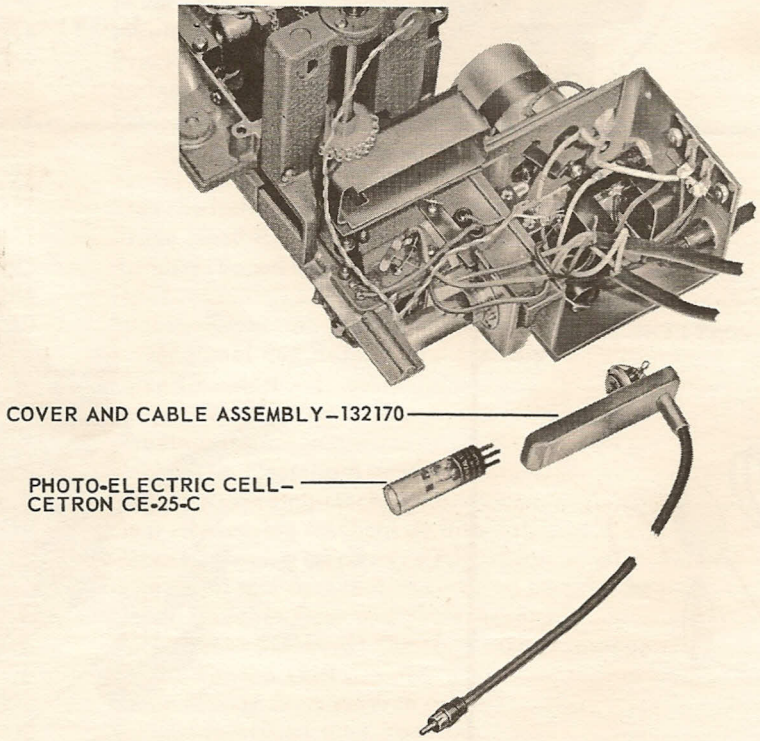

FIGURE 19

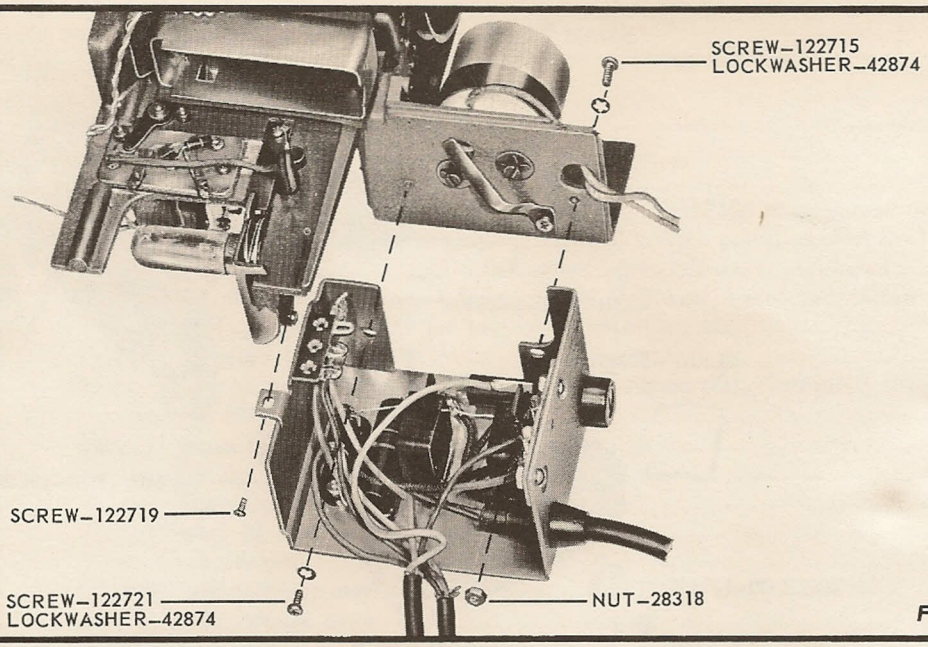

FIGURE 20

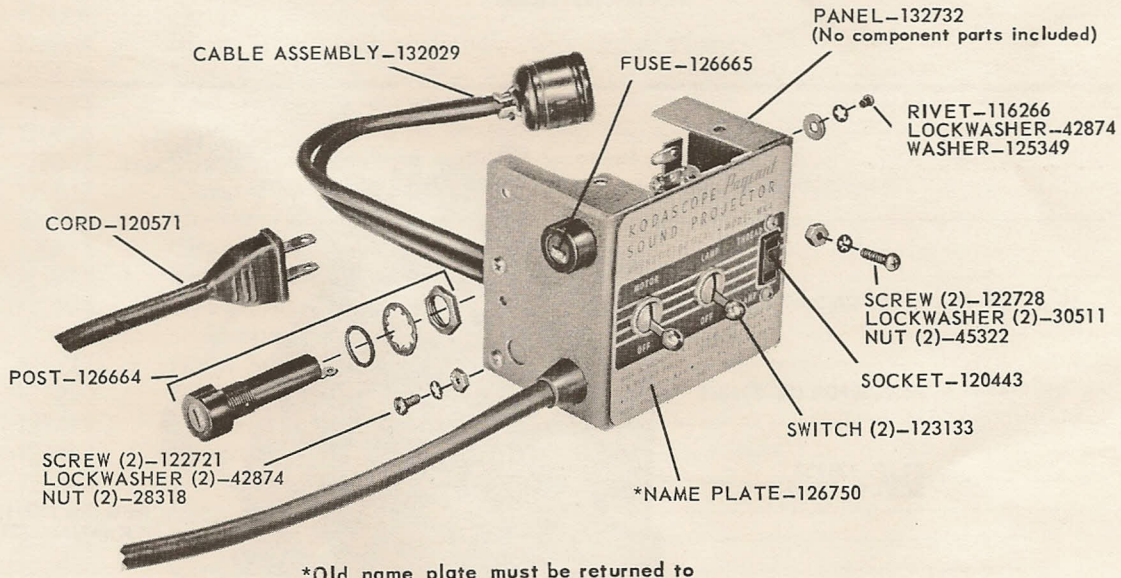

*Old name plate must be returned to Eastman Kodak Company, Apparatus Parts Service, Rochester 4, N. Y. before a new plate will be supplied.

FIGURE 21

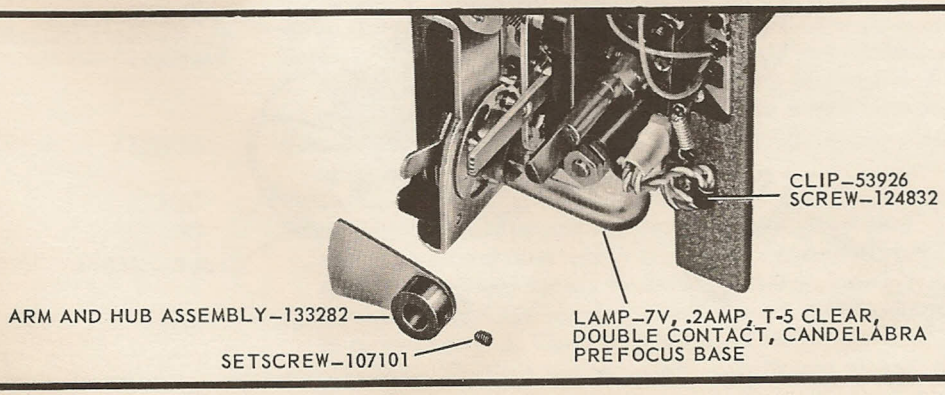

FIGURE 22

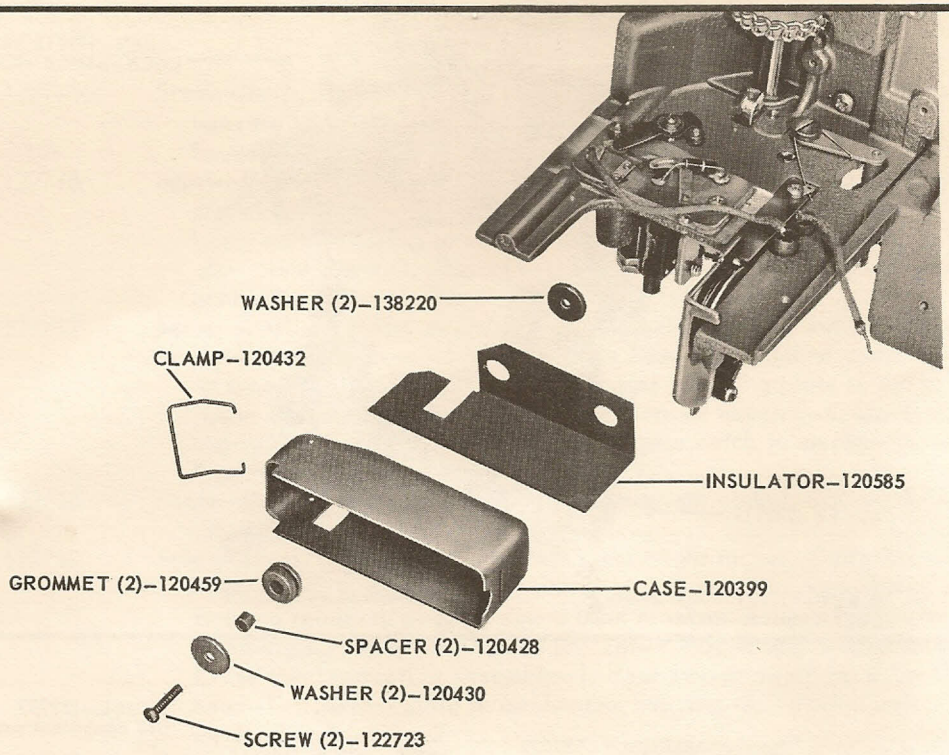

FIGURE 23

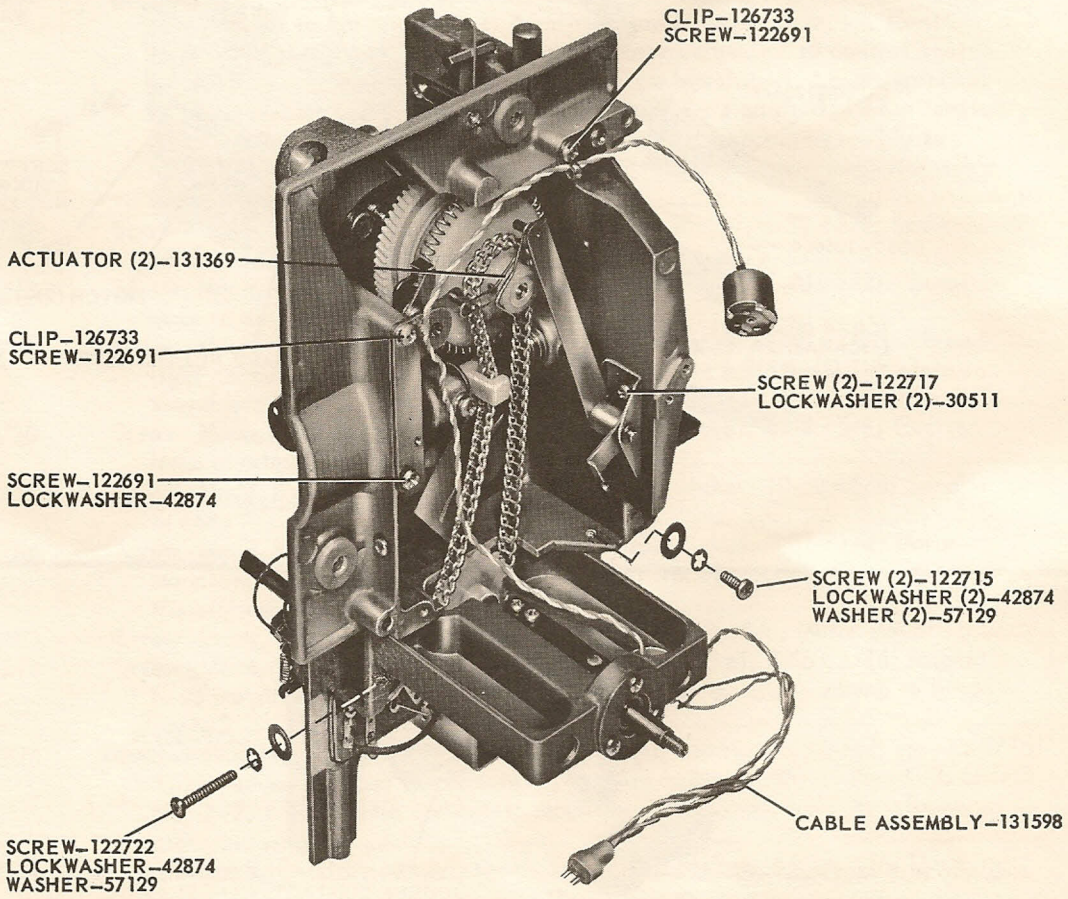

FIGURE 24

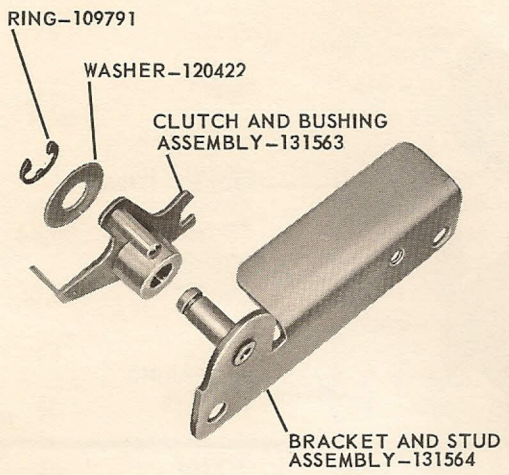

FIGURE 25

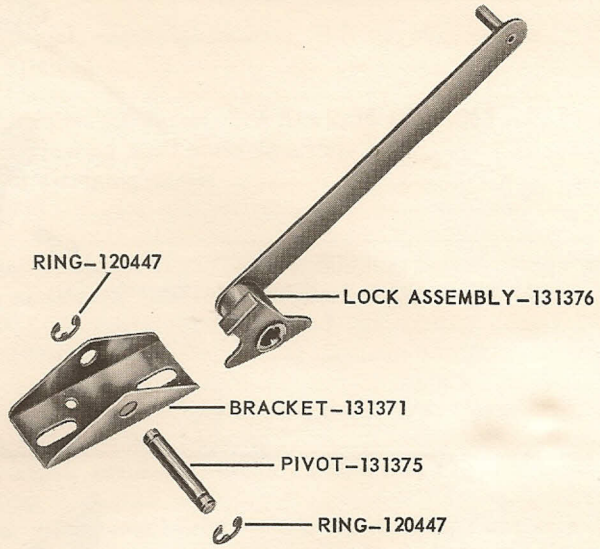

FIGURE 26

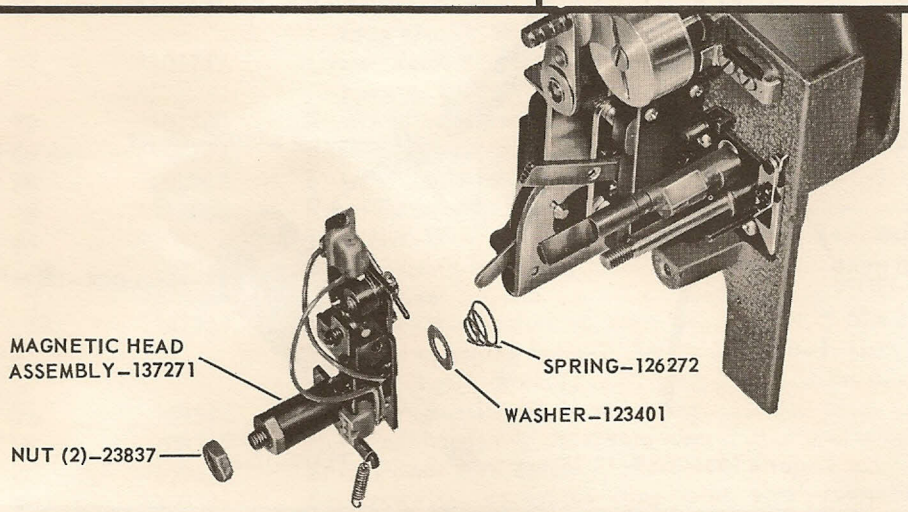

FIGURE 27

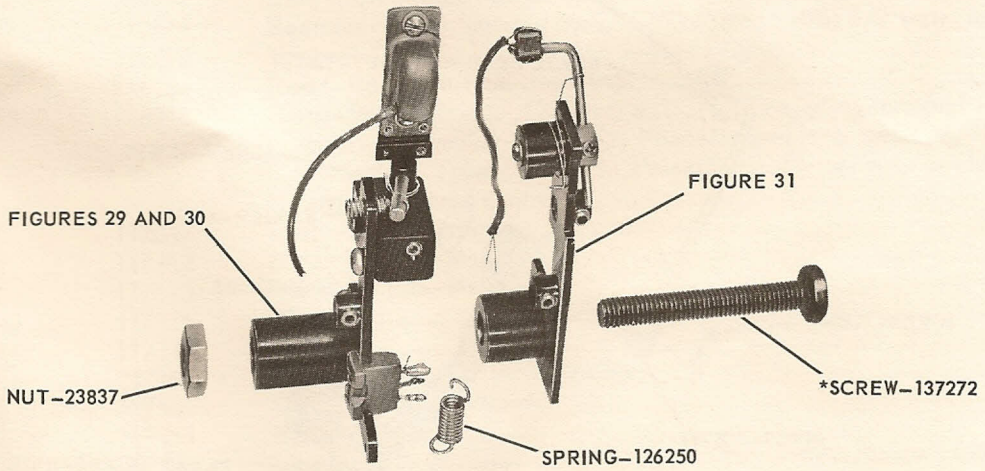

*HOLDING SCREW (For shipping purposes only)

FIGURE 28

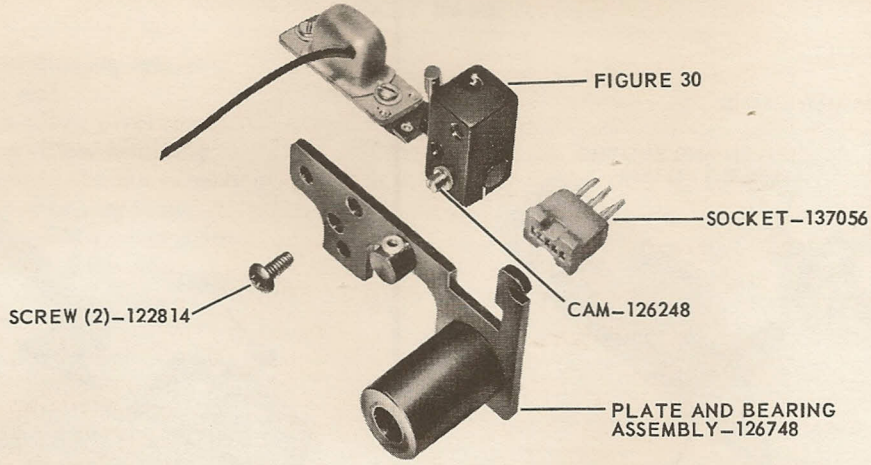

FIGURE 29

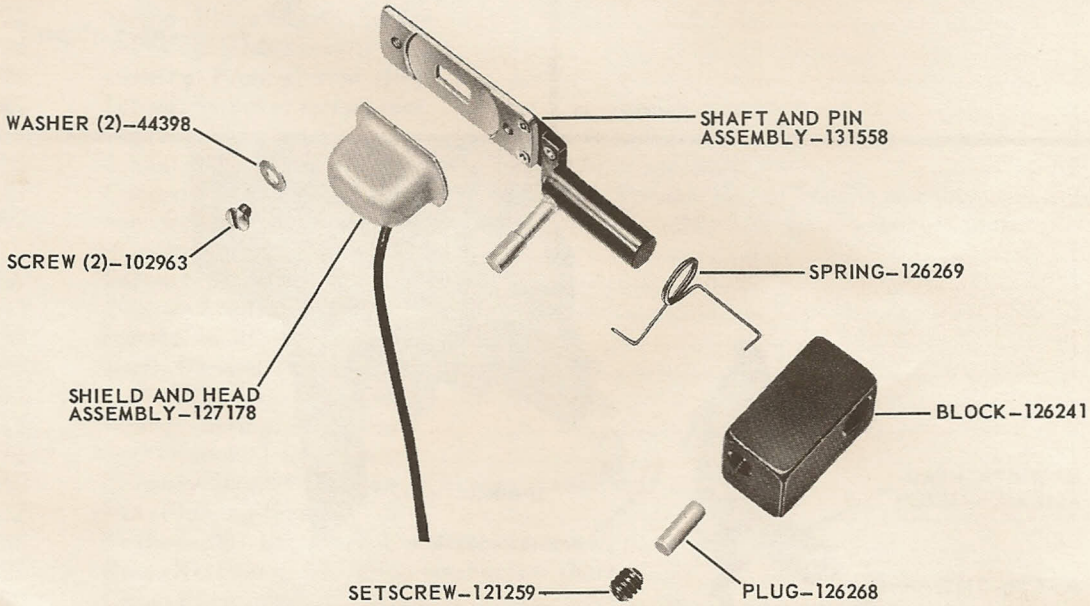

FIGURE 30

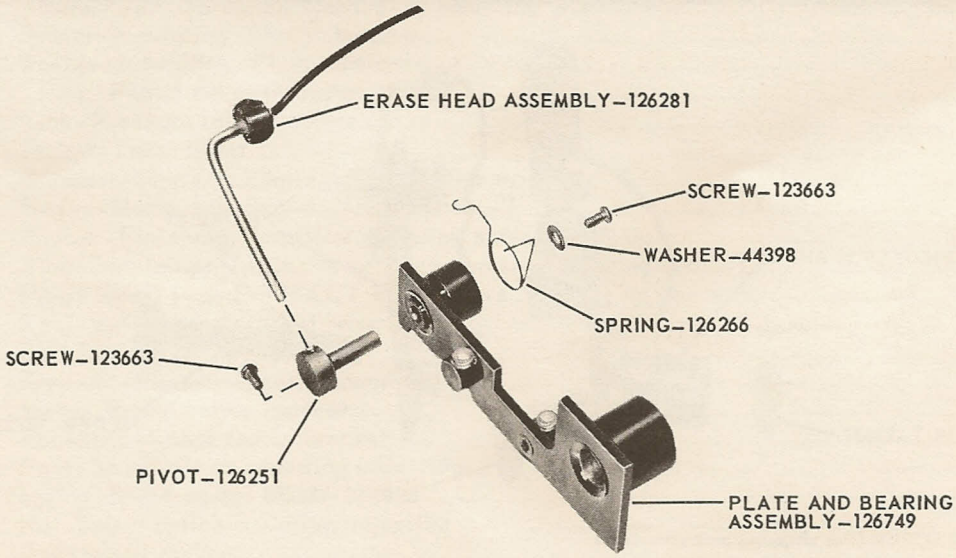

FIGURE 31

Always give PART NUMBER and NAME when ordering parts

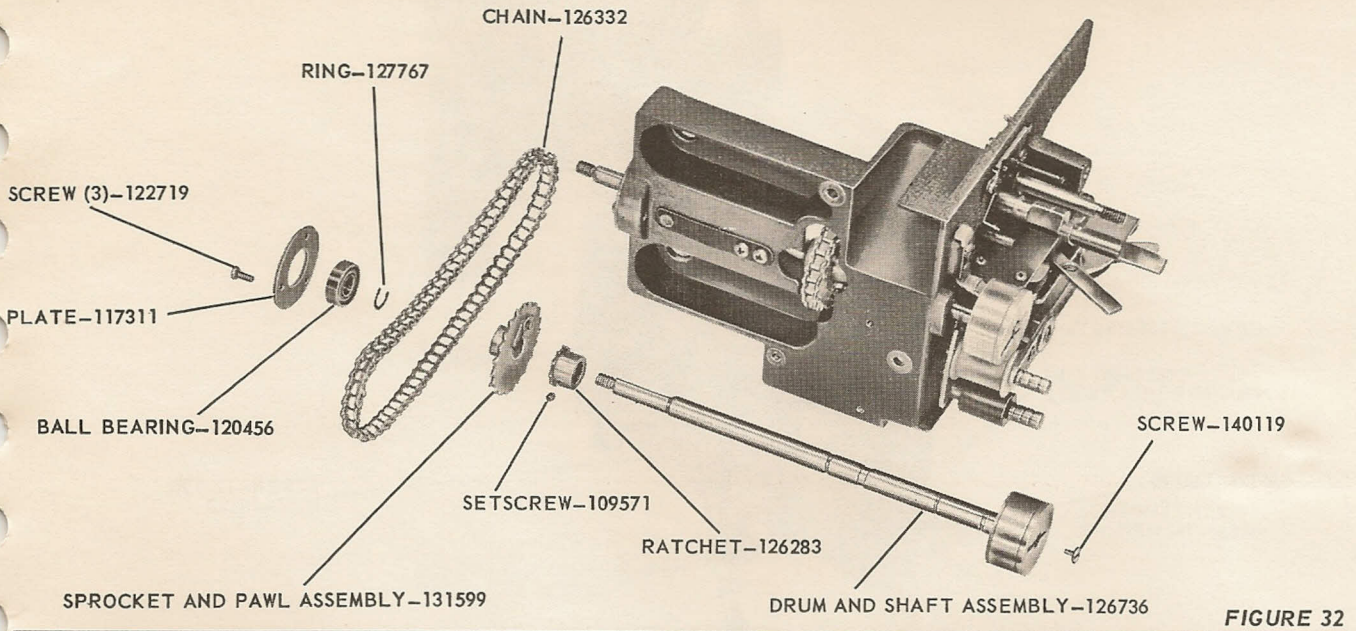

FIGURE 32

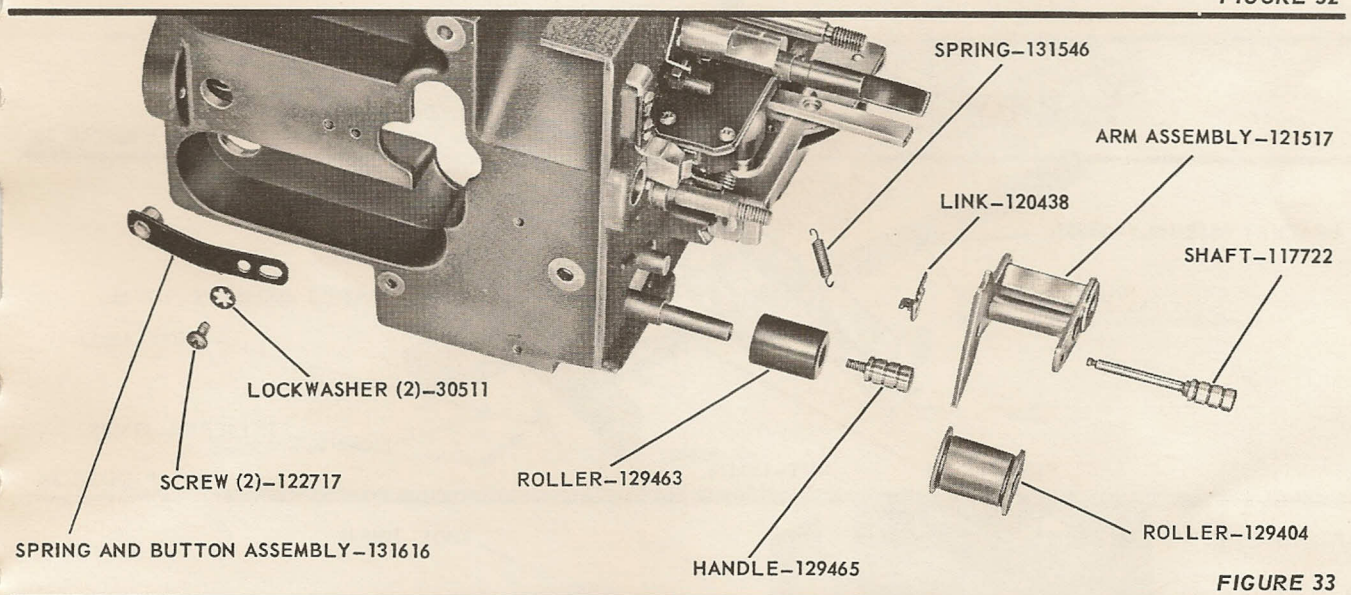

FIGURE 33

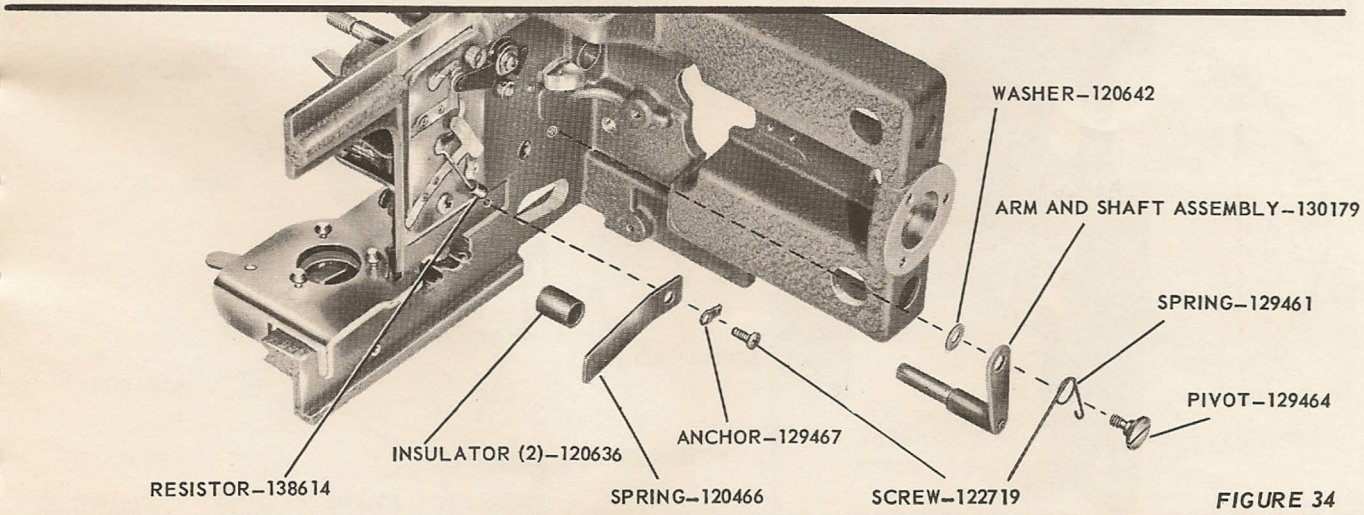

FIGURE 34

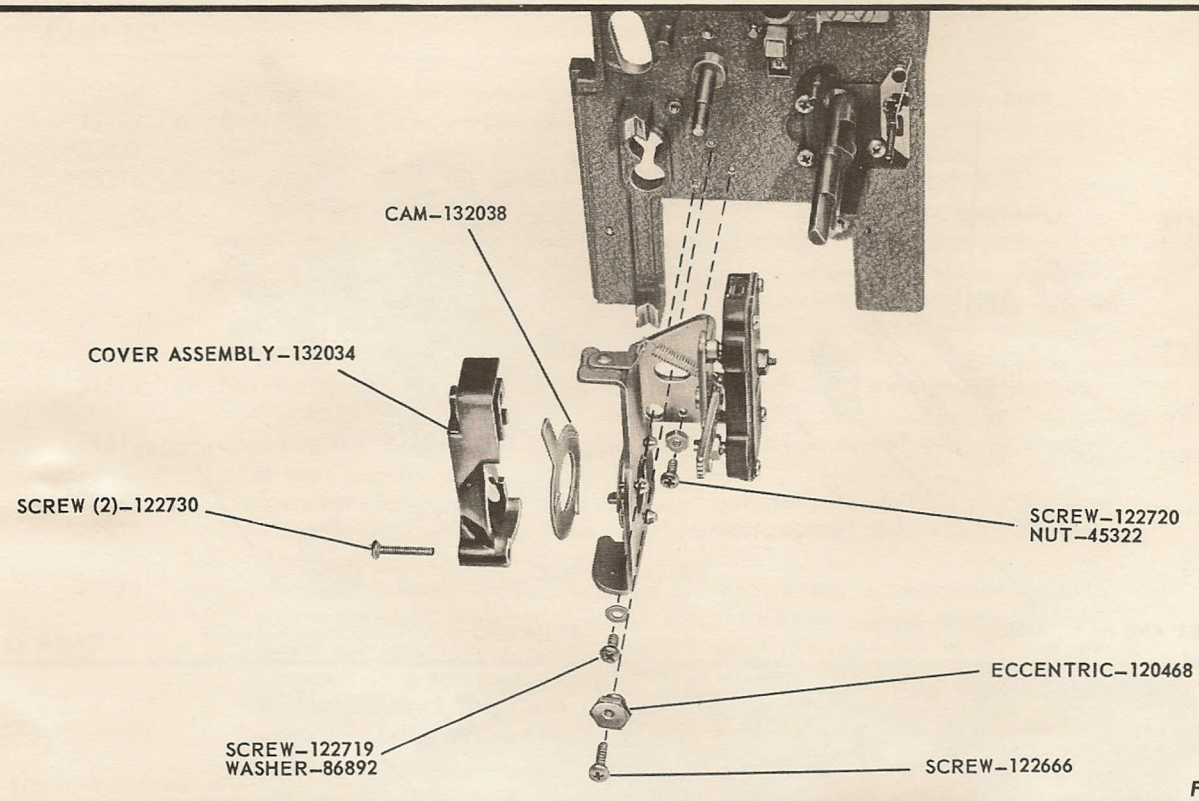

FIGURE 35

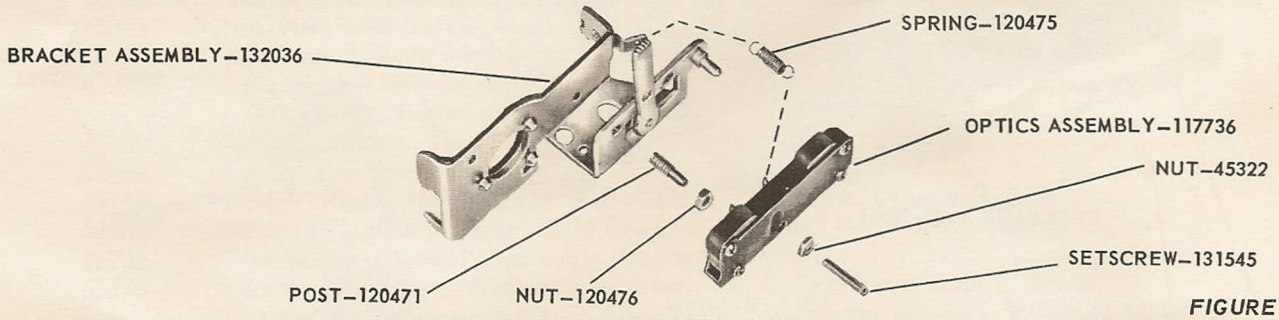

FIGURE 36

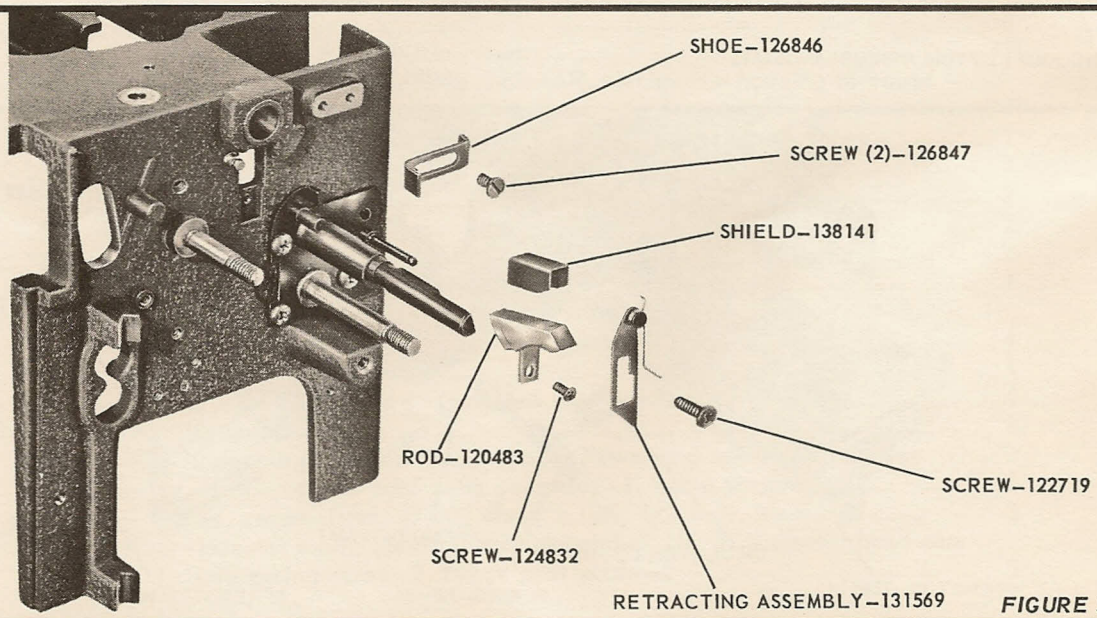

FIGURE 37

Always give PART NUMBER and NAME when ordering parts

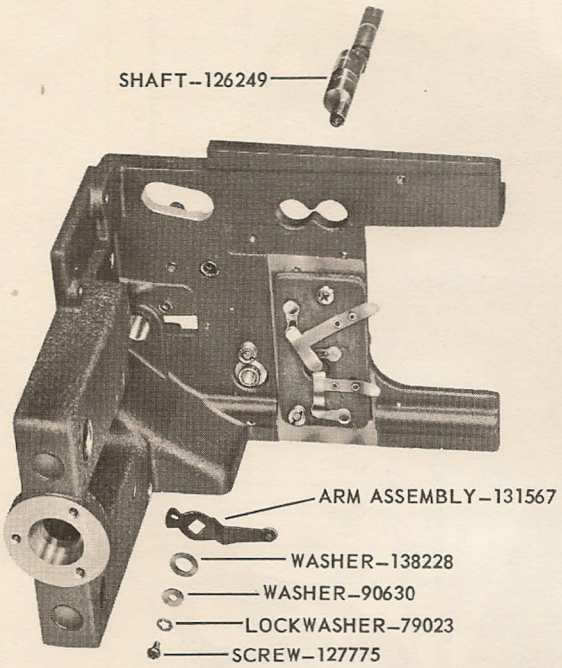

FIGURE 38

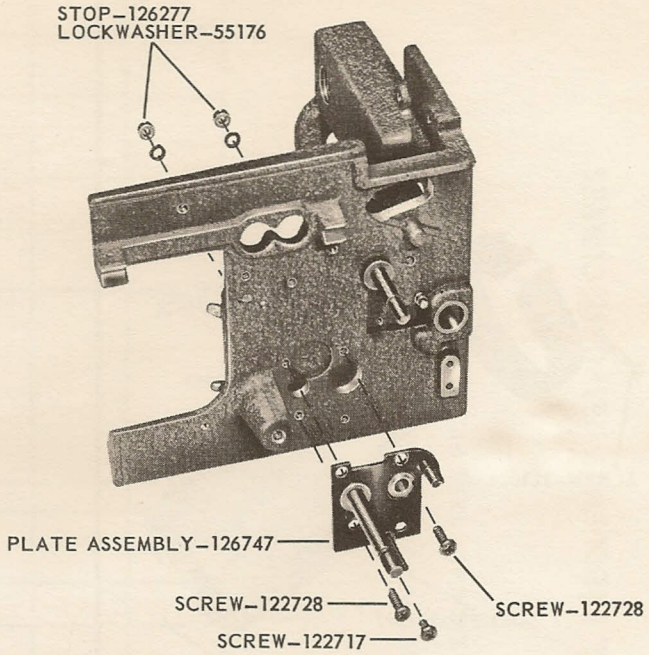

FIGURE 39

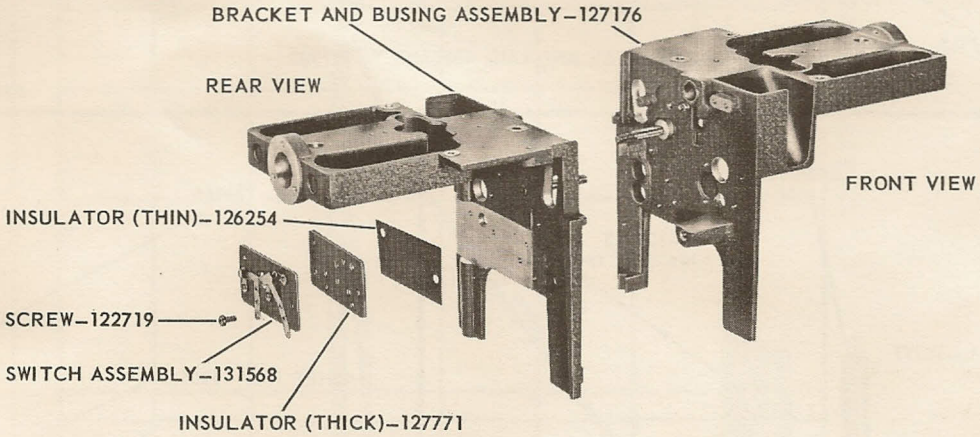

FIGURE 40

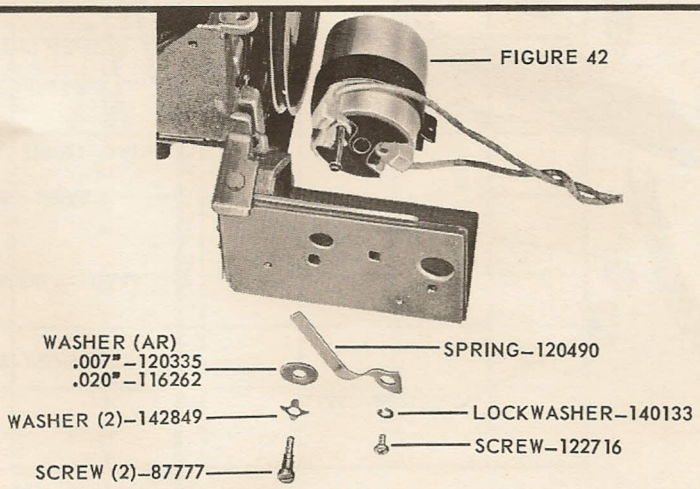

FIGURE 41

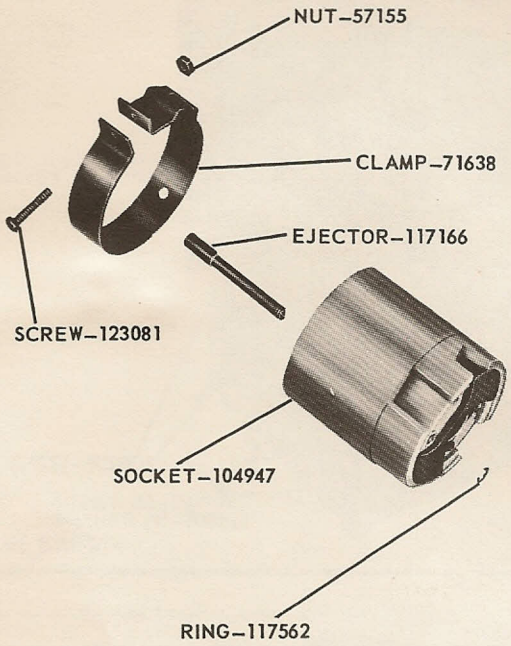

FIGURE 42

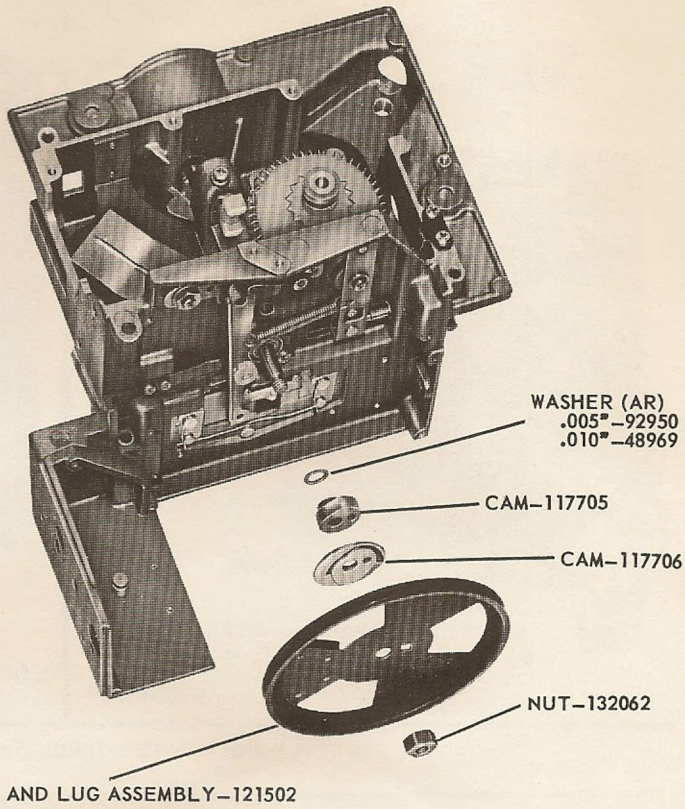

FIGURE 43

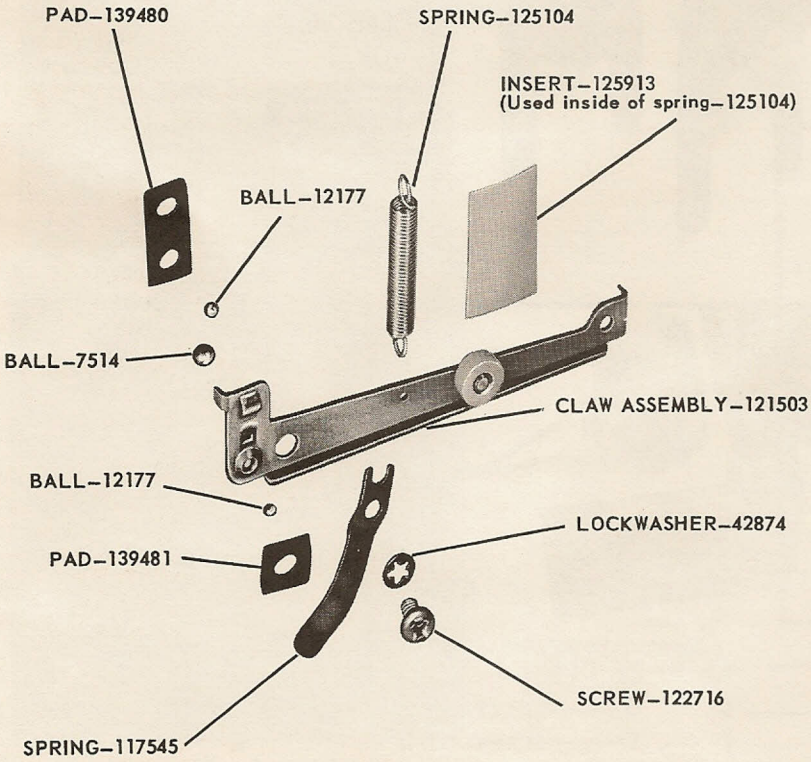

FIGURE 44

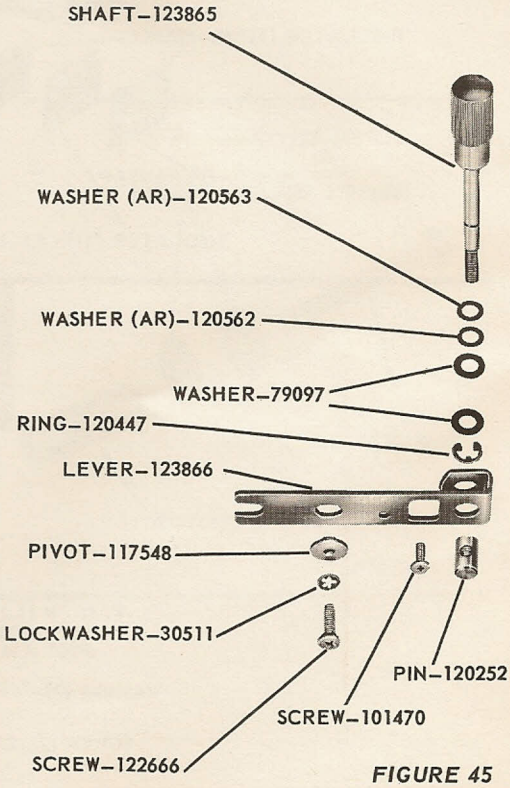

FIGURE 45

Always give PART NUMBER and NAME when ordering parts

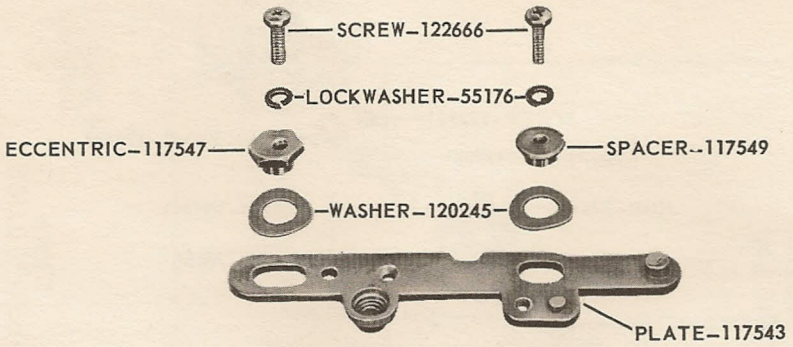

FIGURE 46

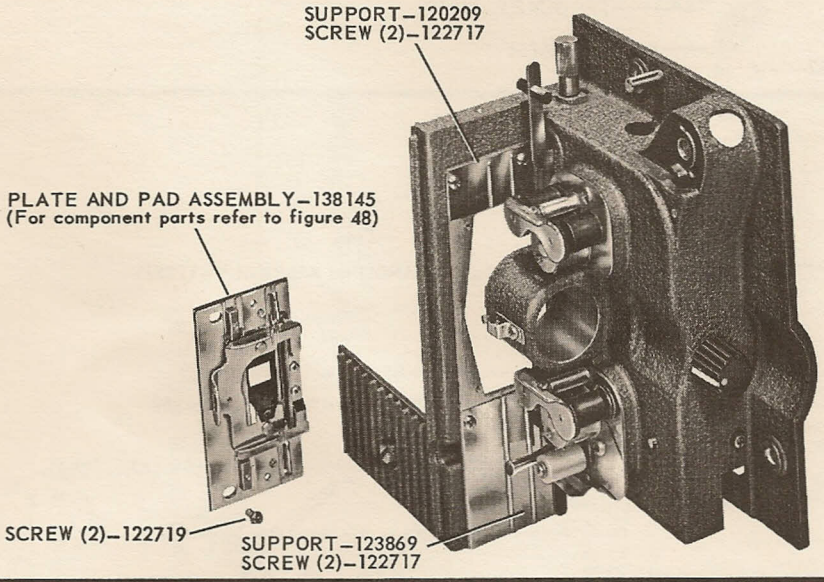

FIGURE 47

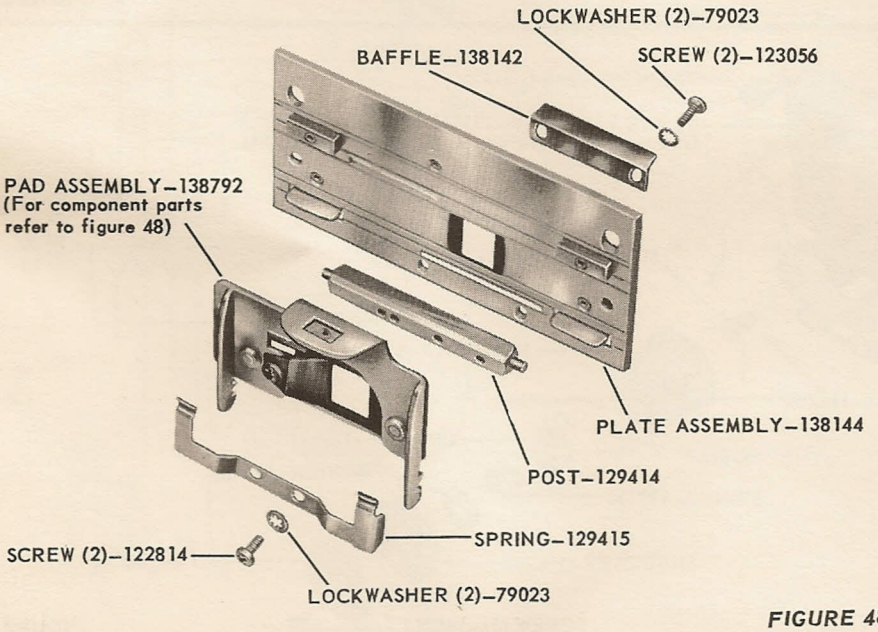

FIGURE 48

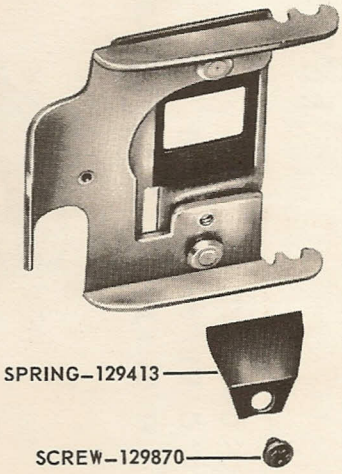

FIGURE 49

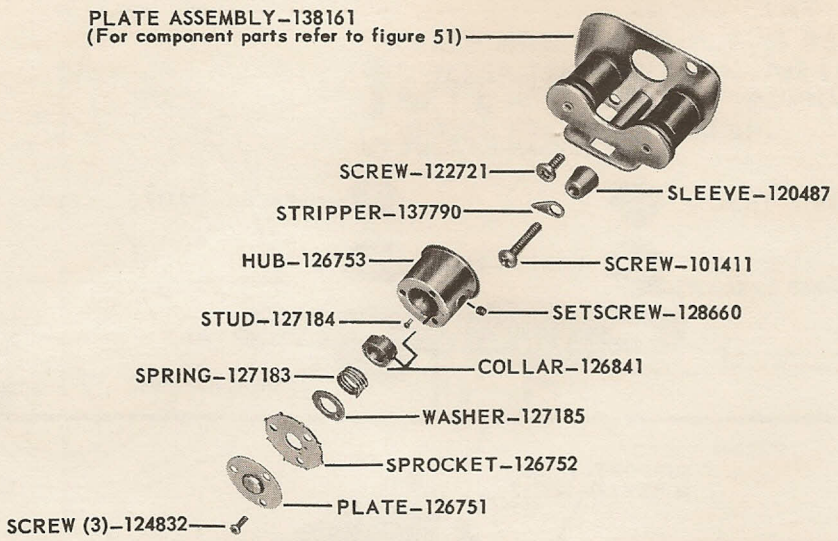

FIGURE 50

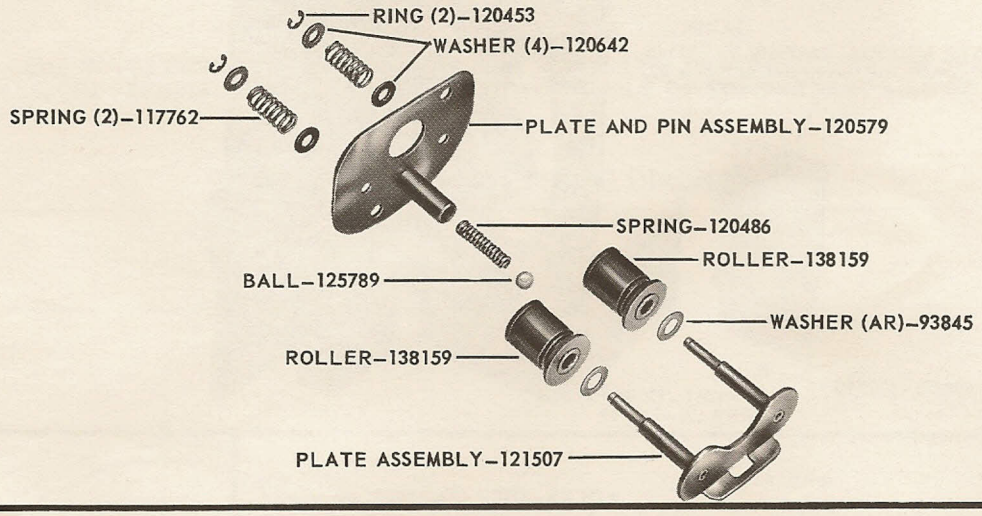

FIGURE 51

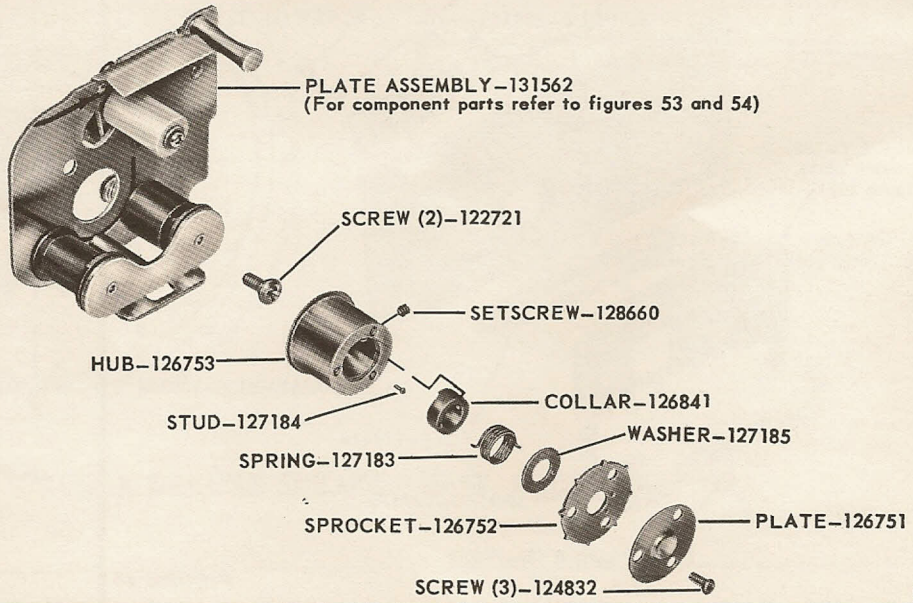

FIGURE 52

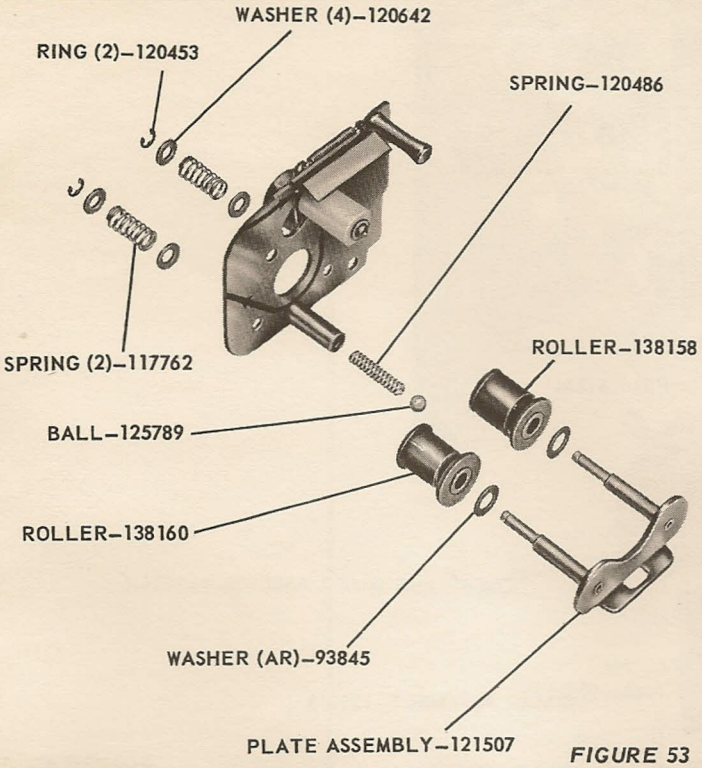

FIGURE 53

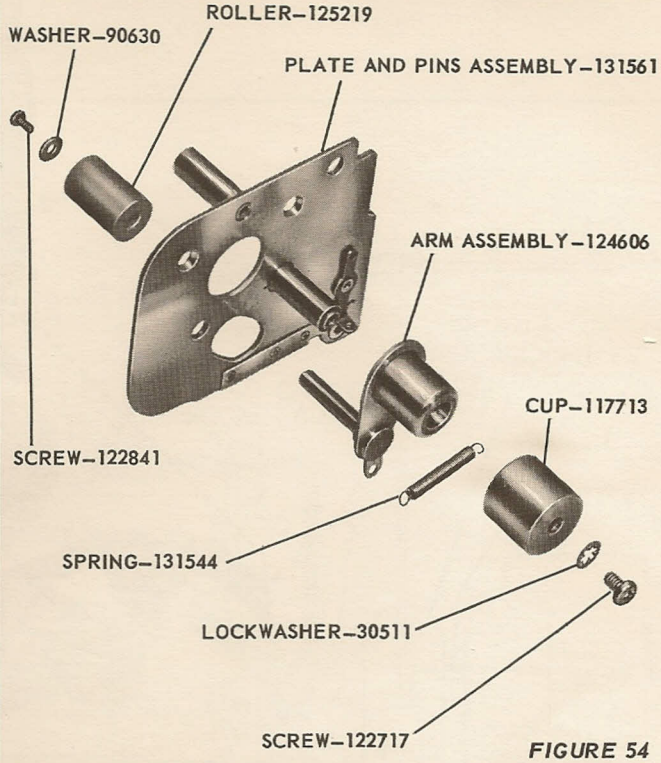

FIGURE 54

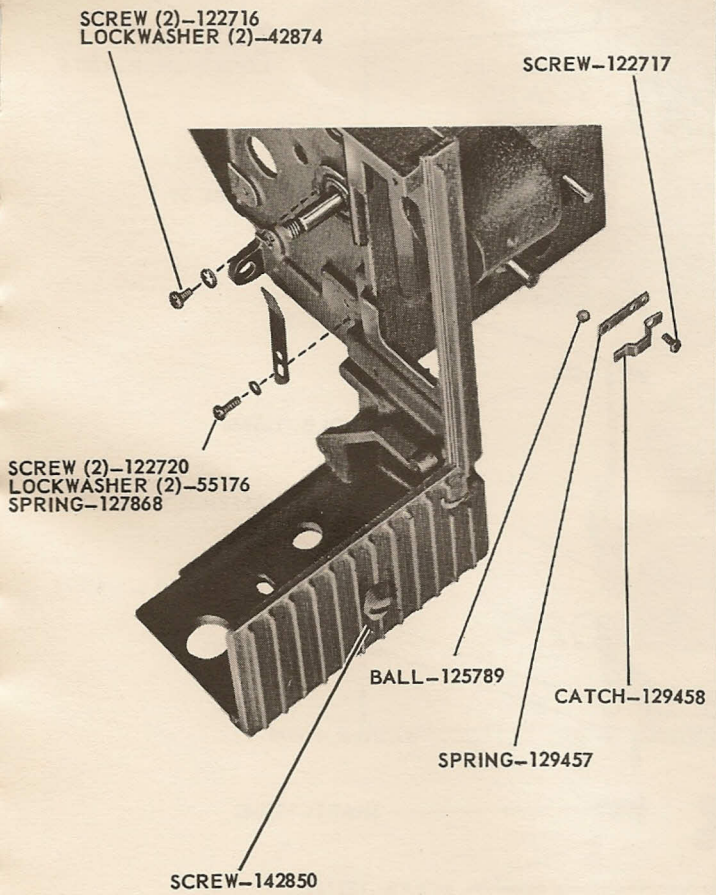

FIGURE 55

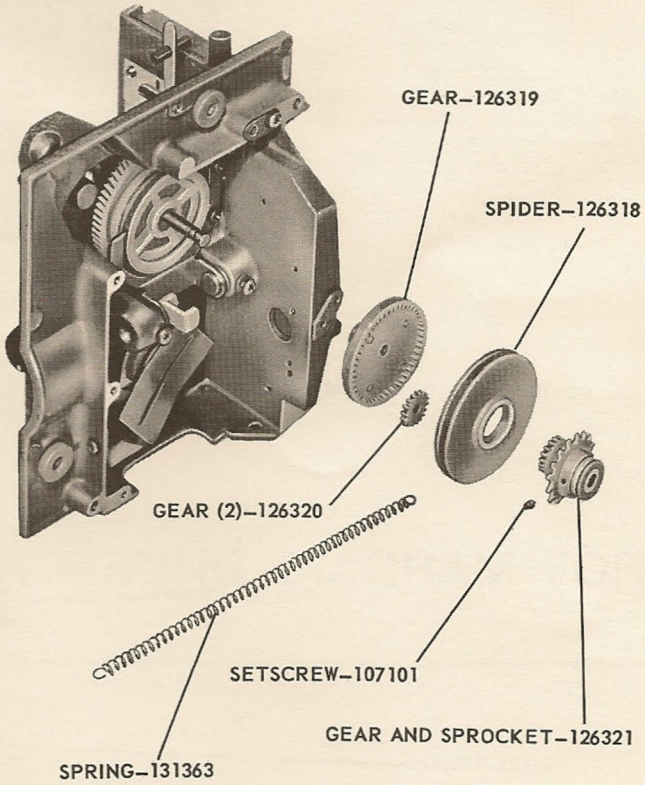

FIGURE 56

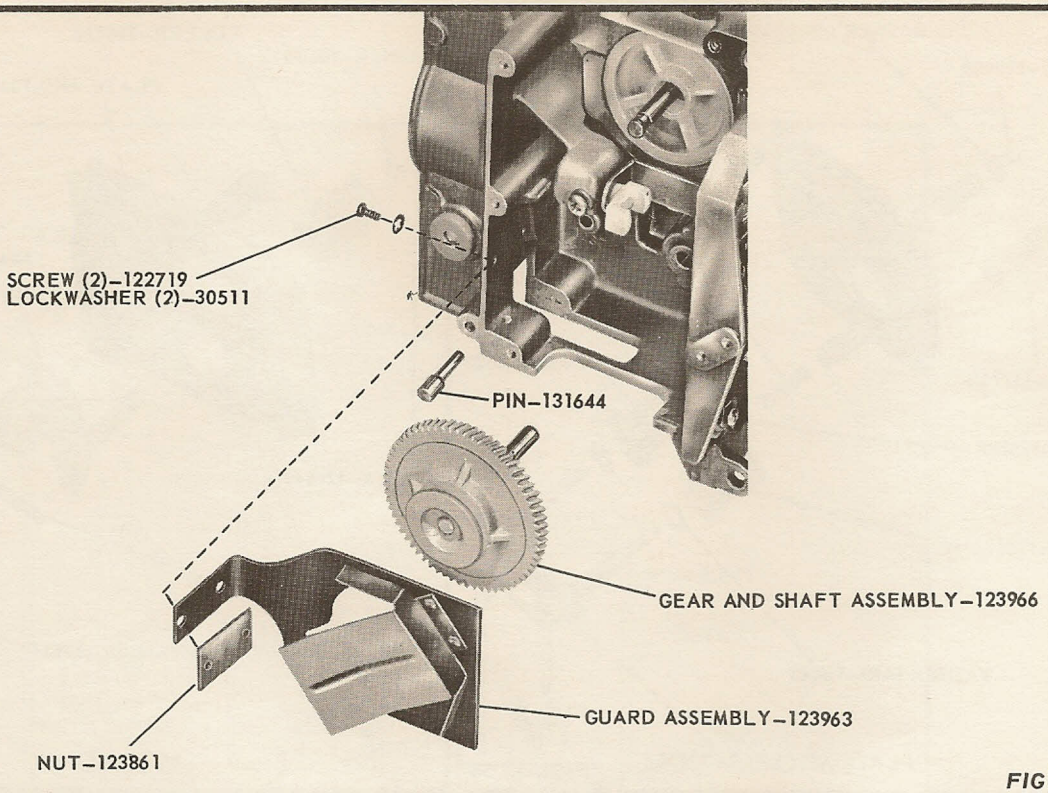

FIGURE 57

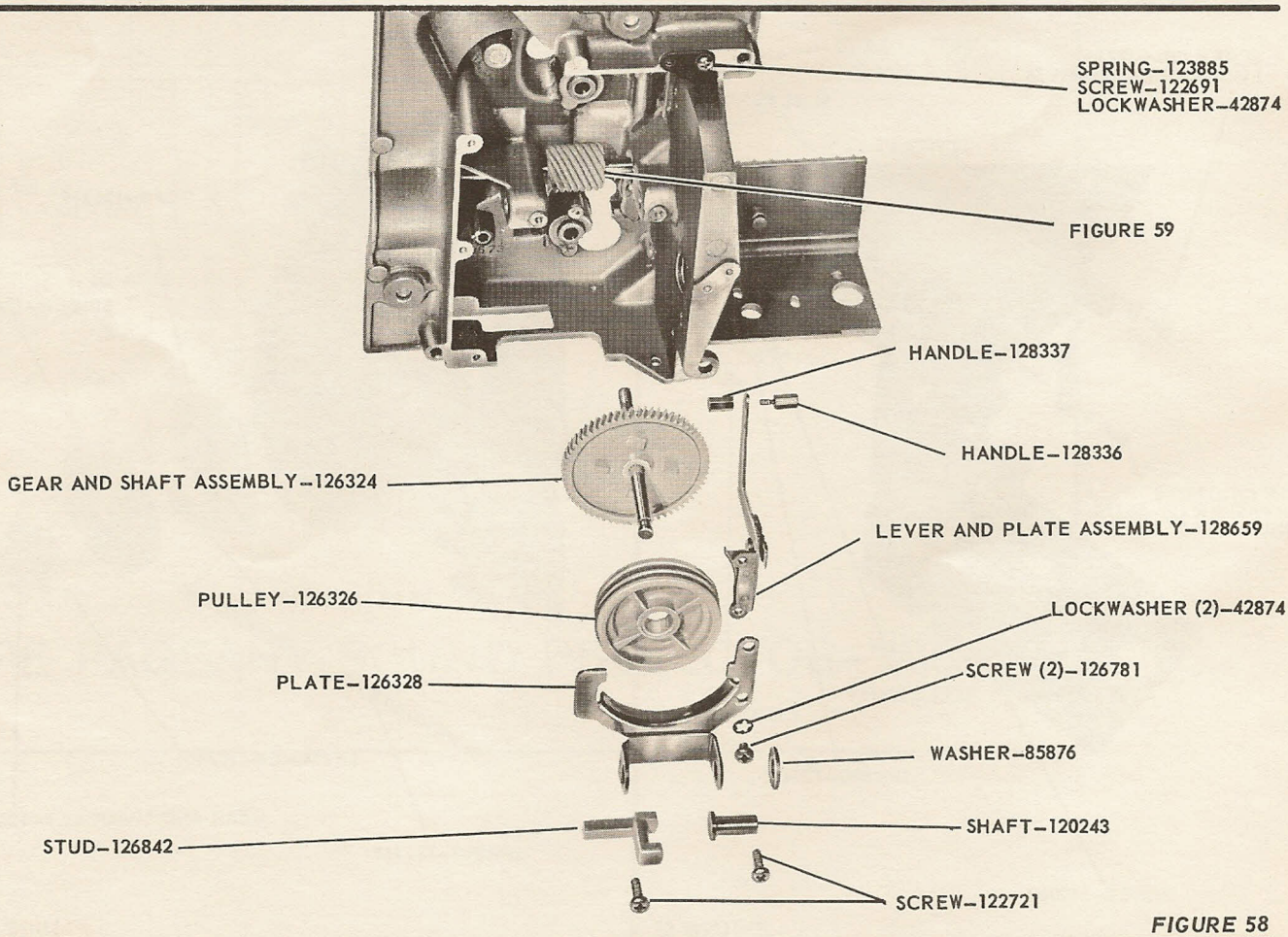

FIGURE 58

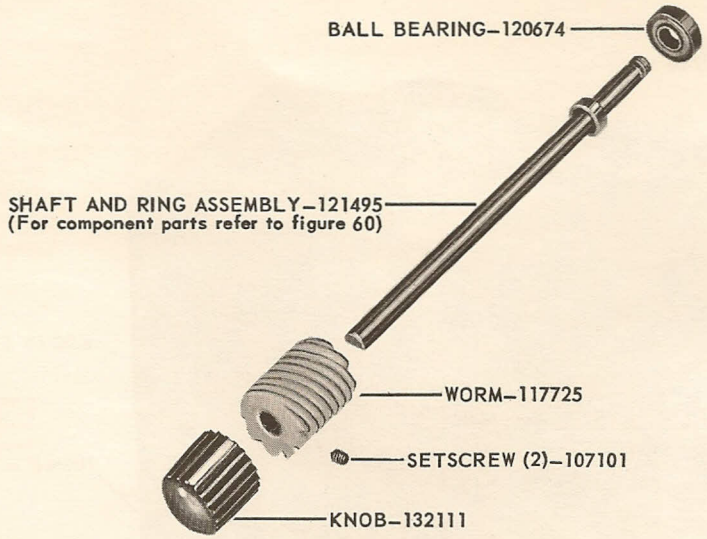

FIGURE 59

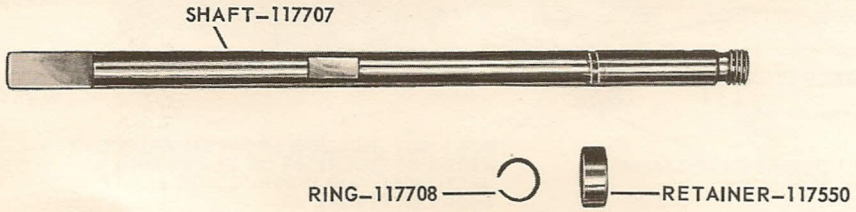

FIGURE 60

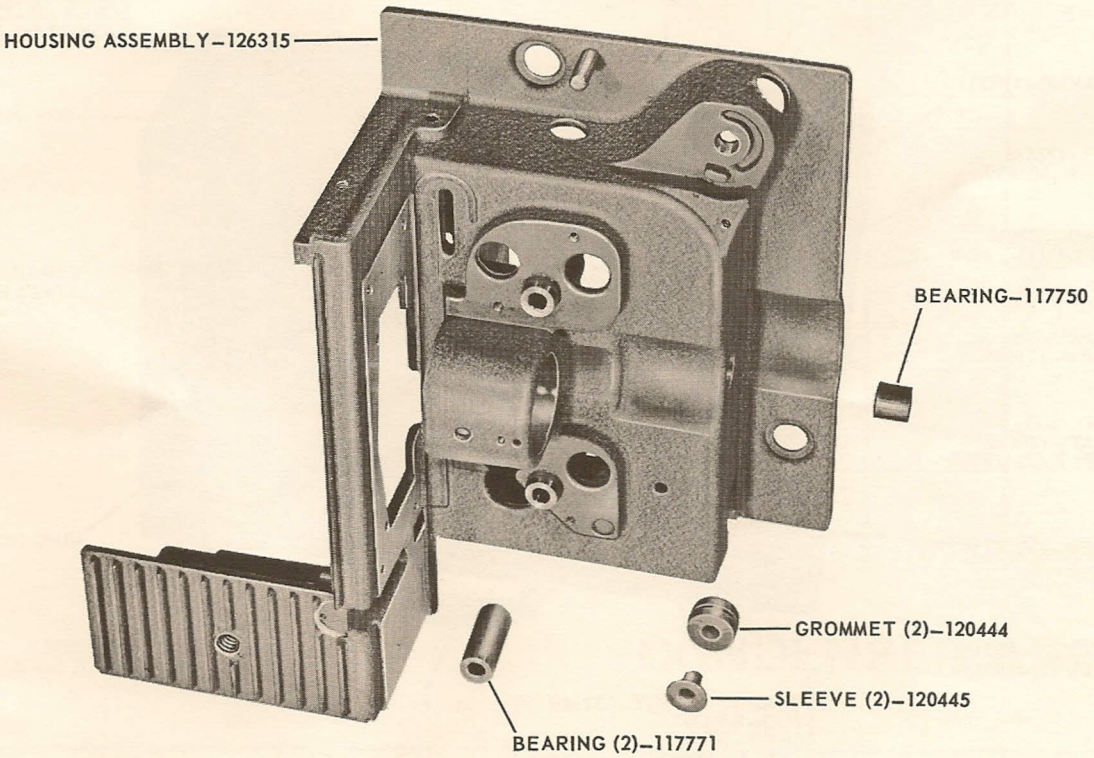

FIGURE 61

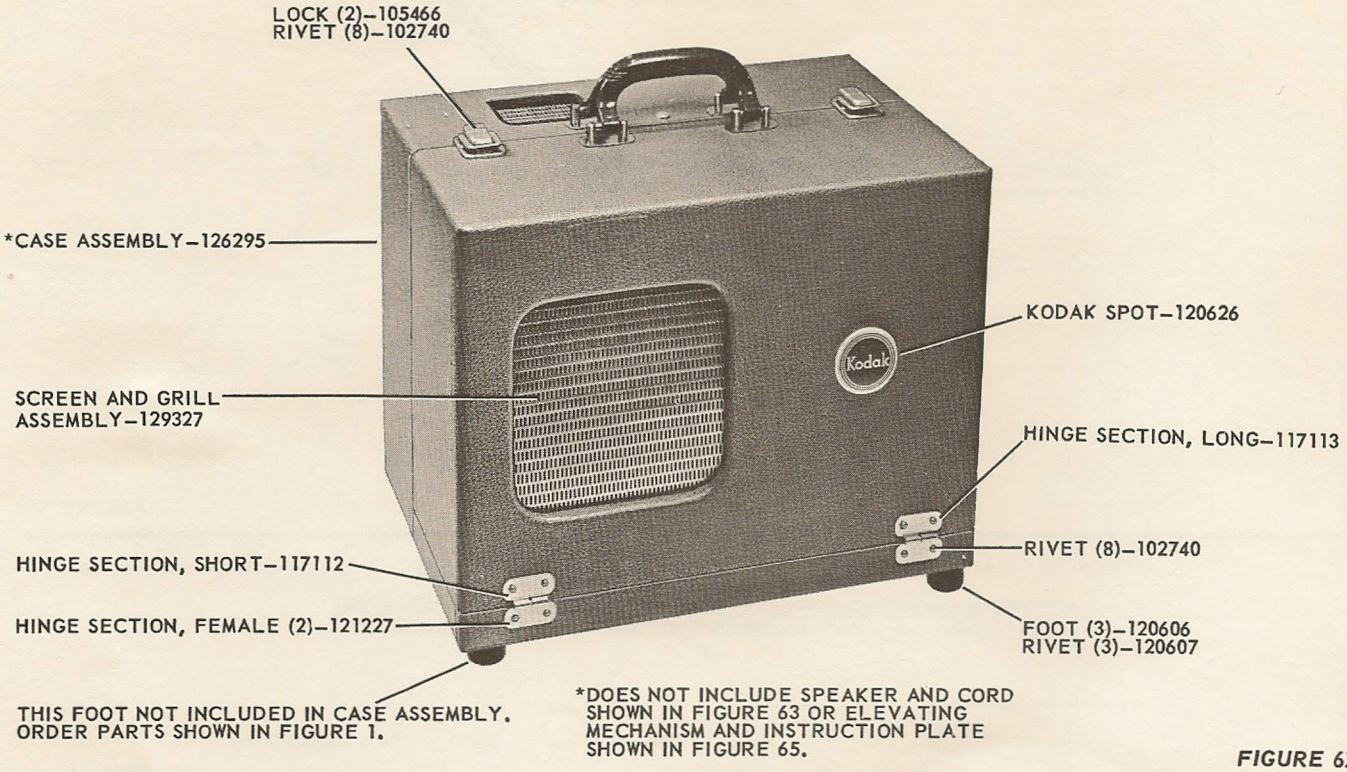

FIGURE 62

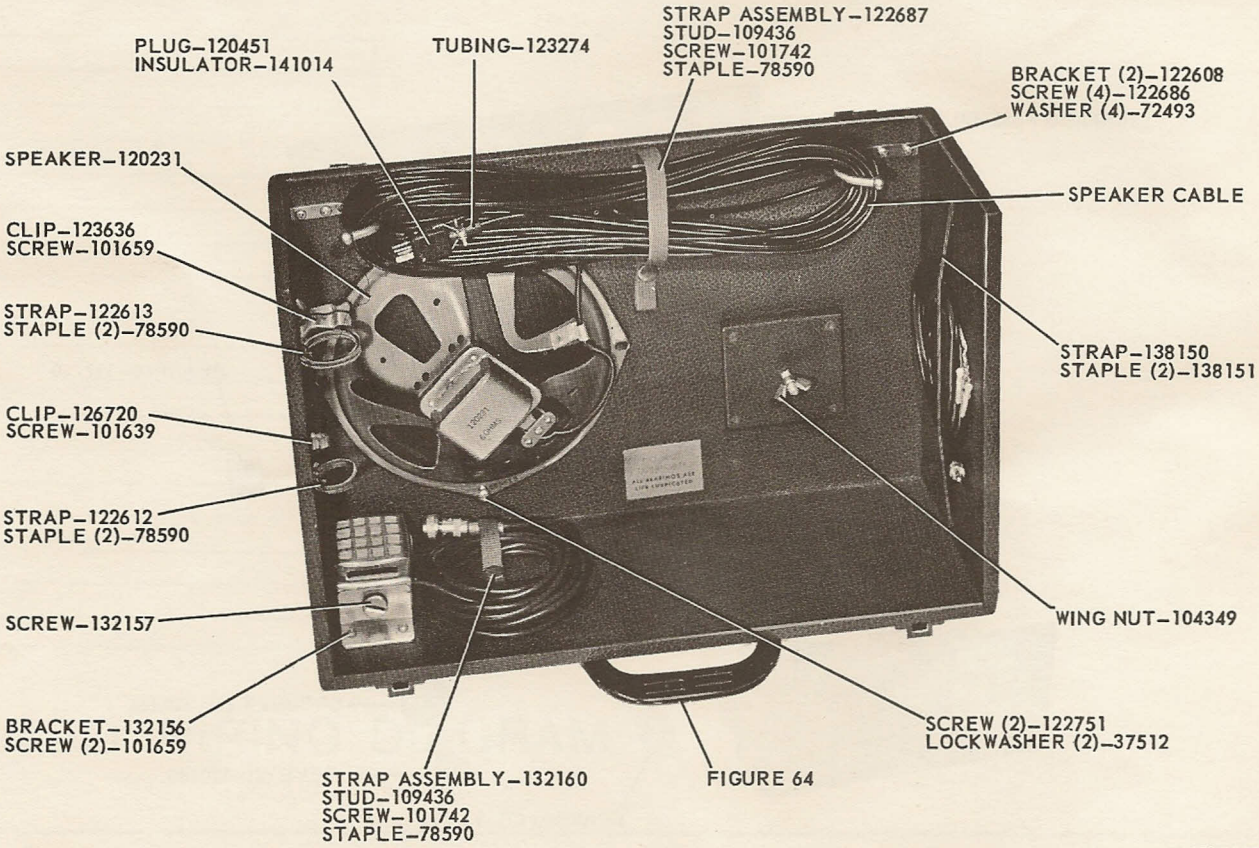

FIGURE 63

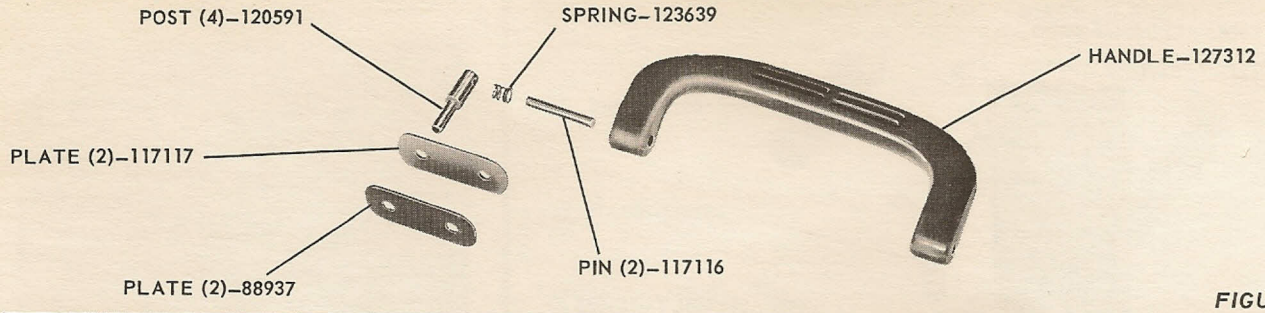

FIGURE 64

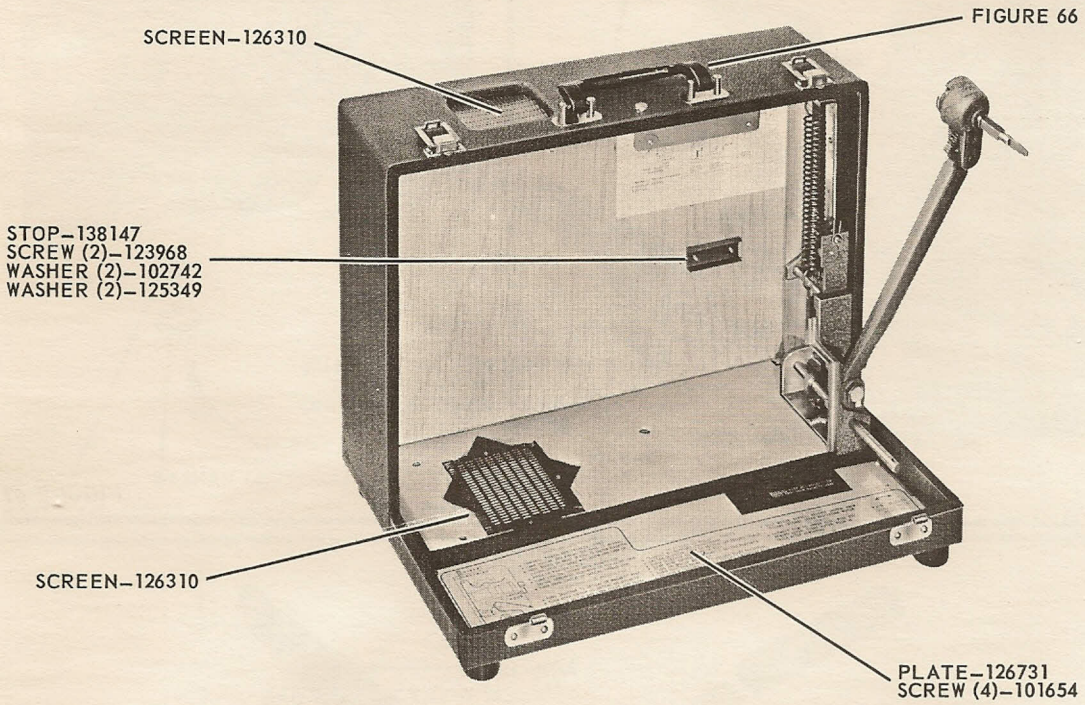

FIGURE 65

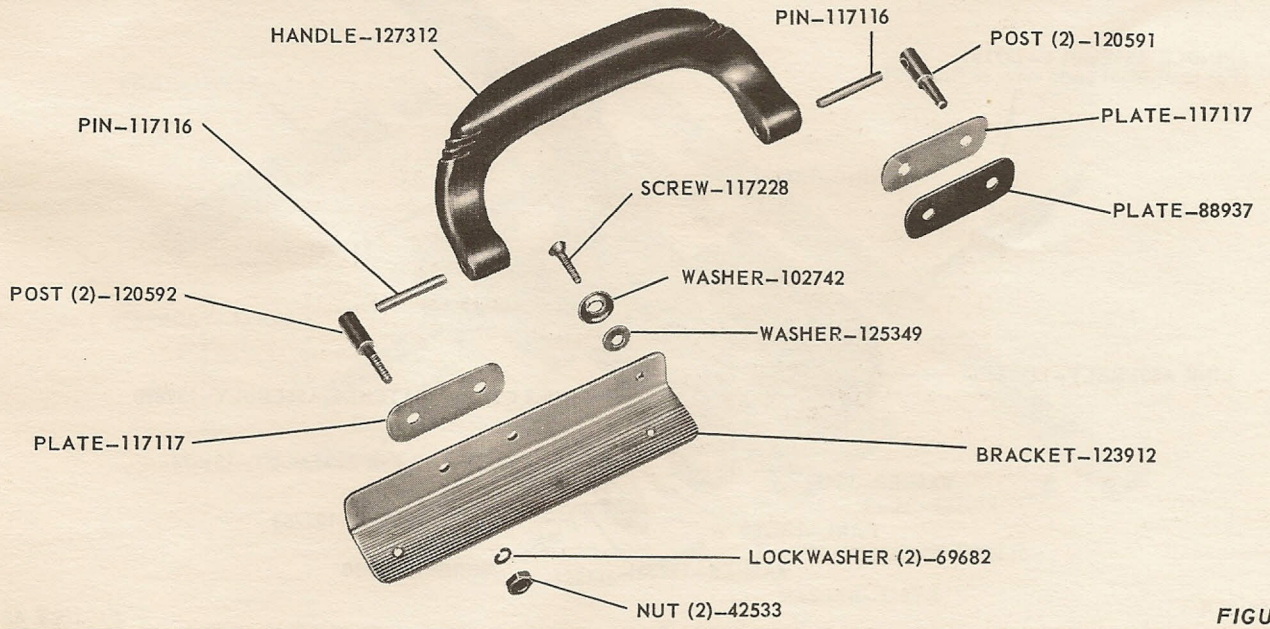

FIGURE 66

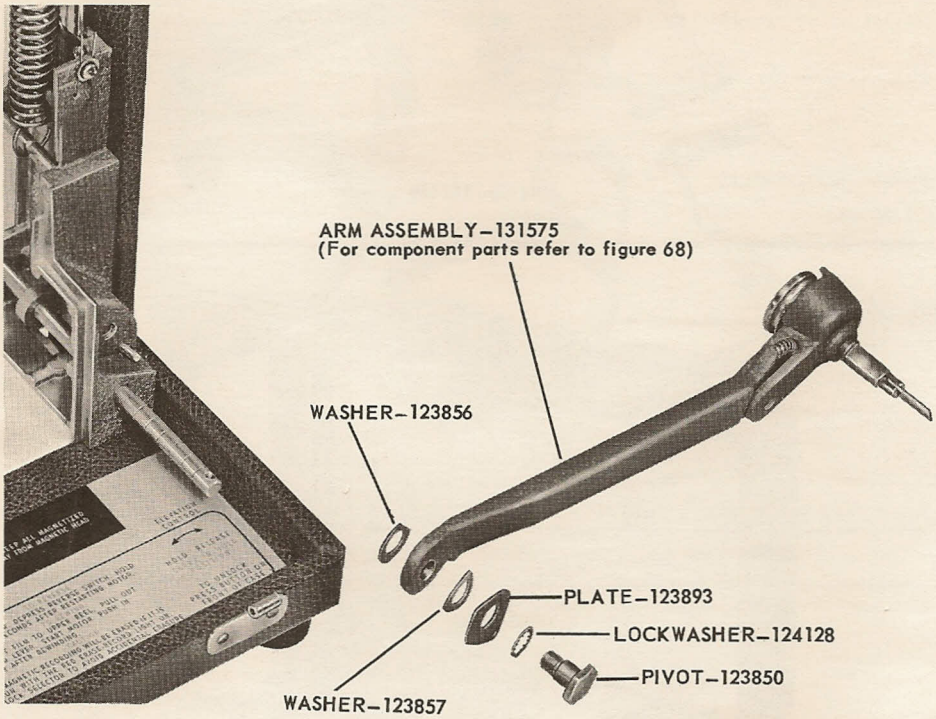

FIGURE 67

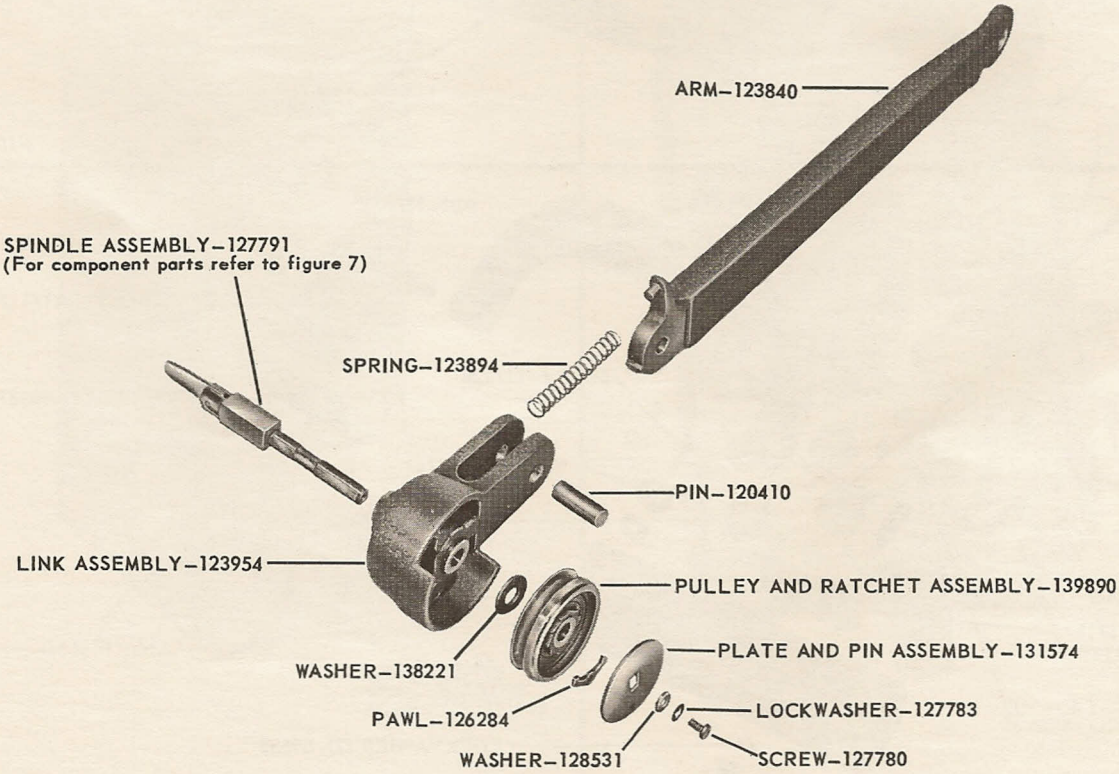

FIGURE 68

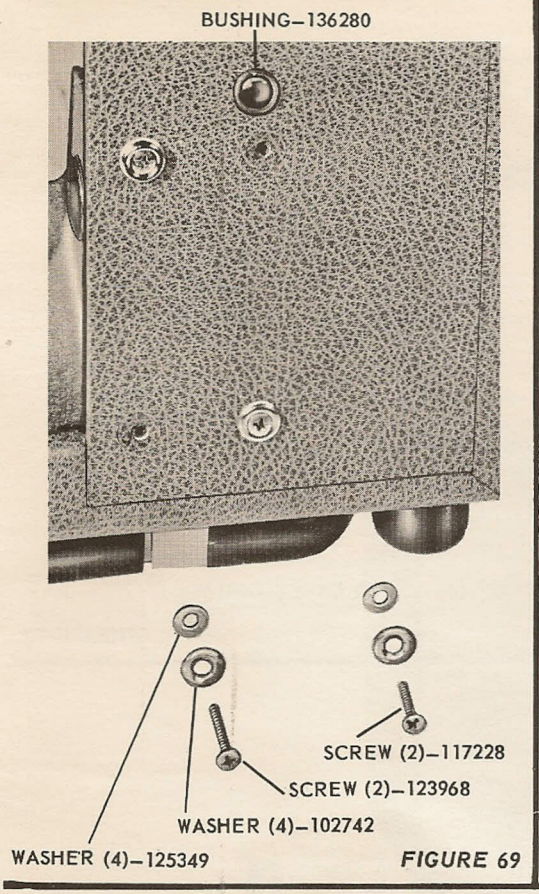

FIGURE 69

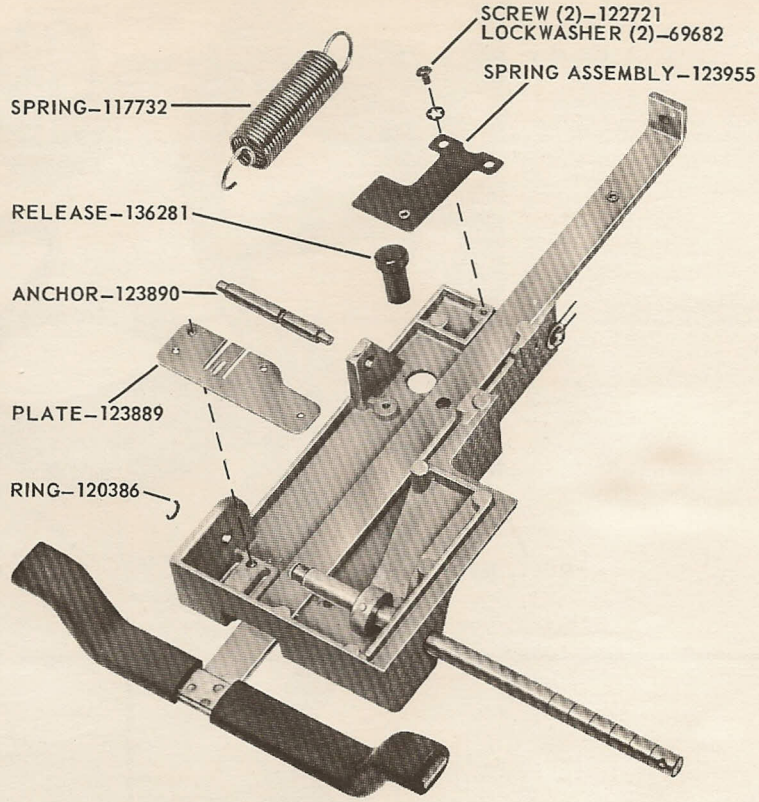

FIGURE 70

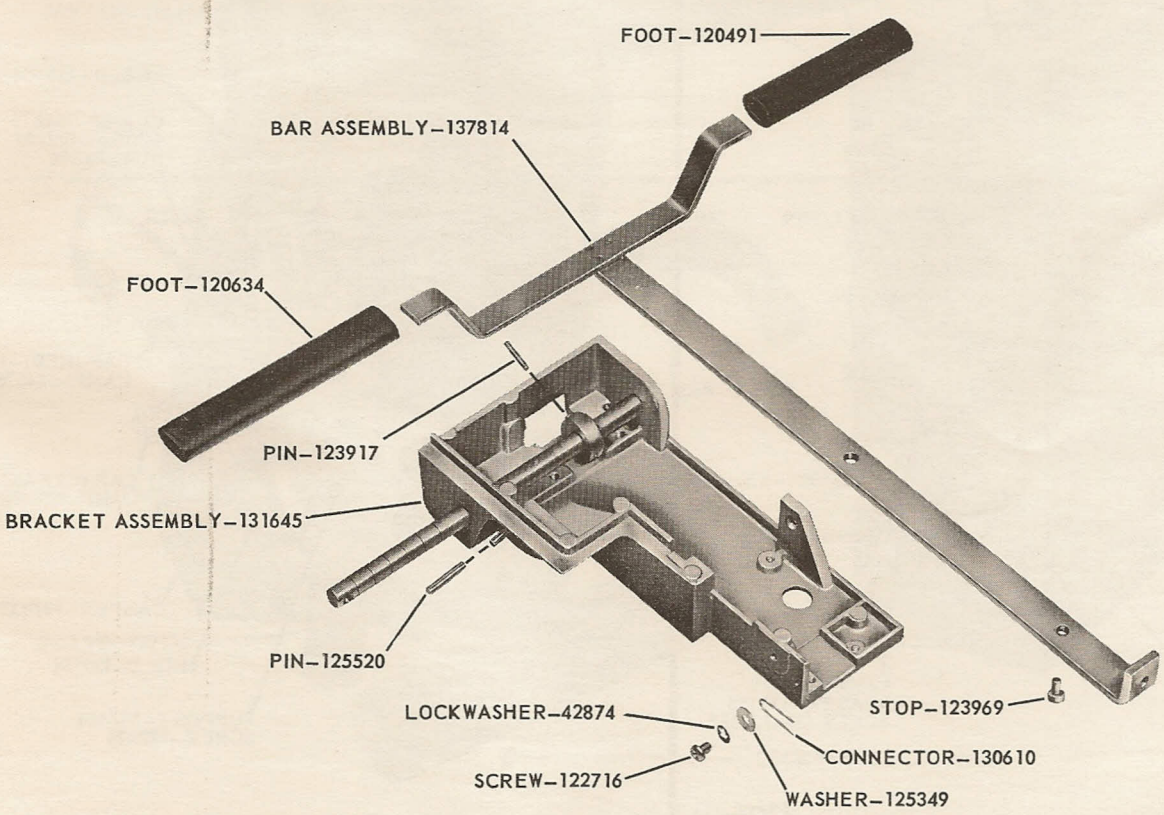

FIGURE 71

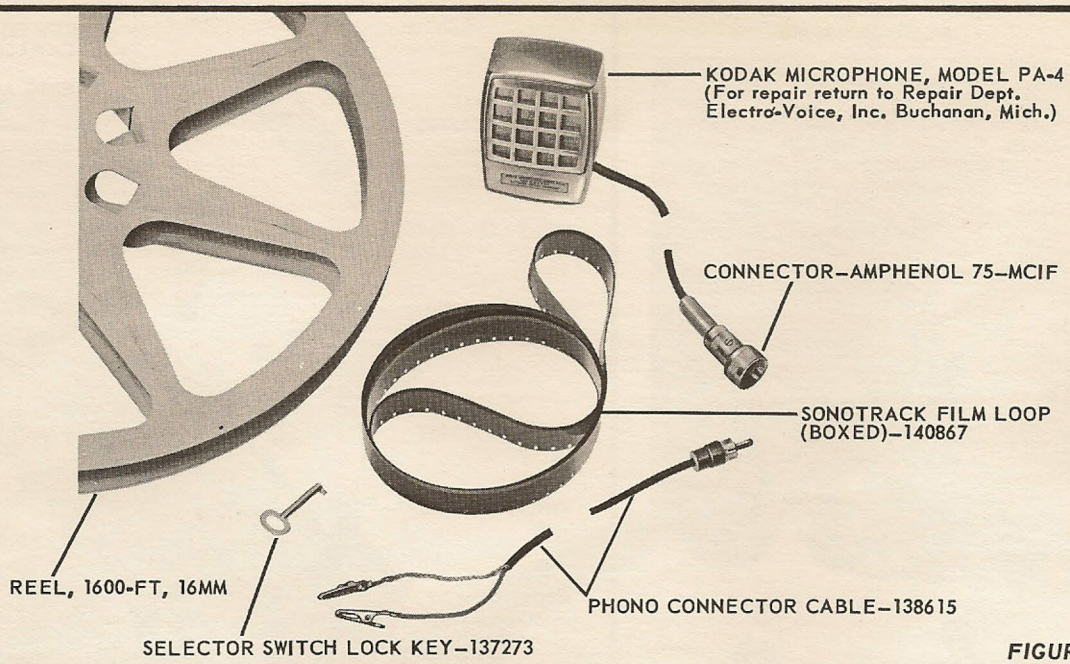

FIGURE 72

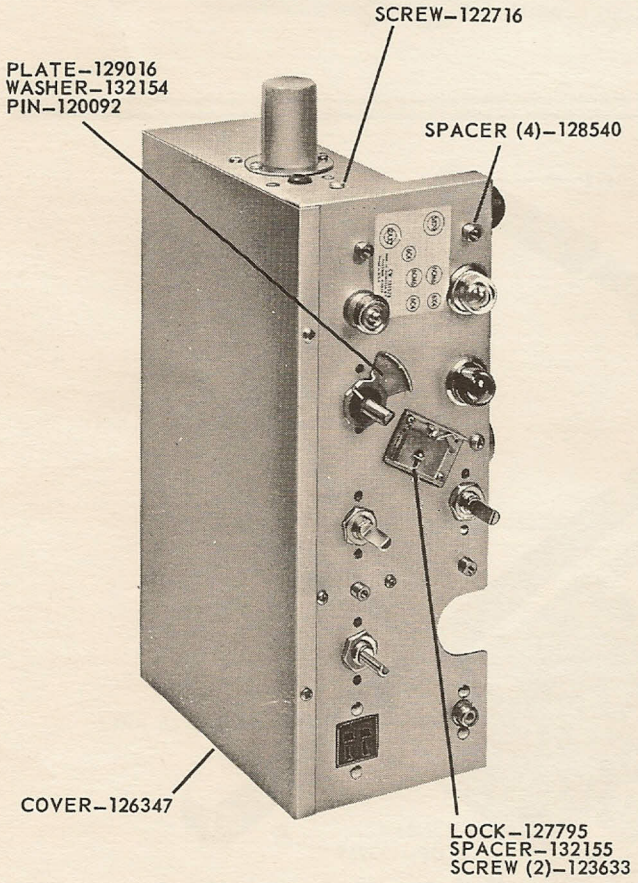

FIGURE 73

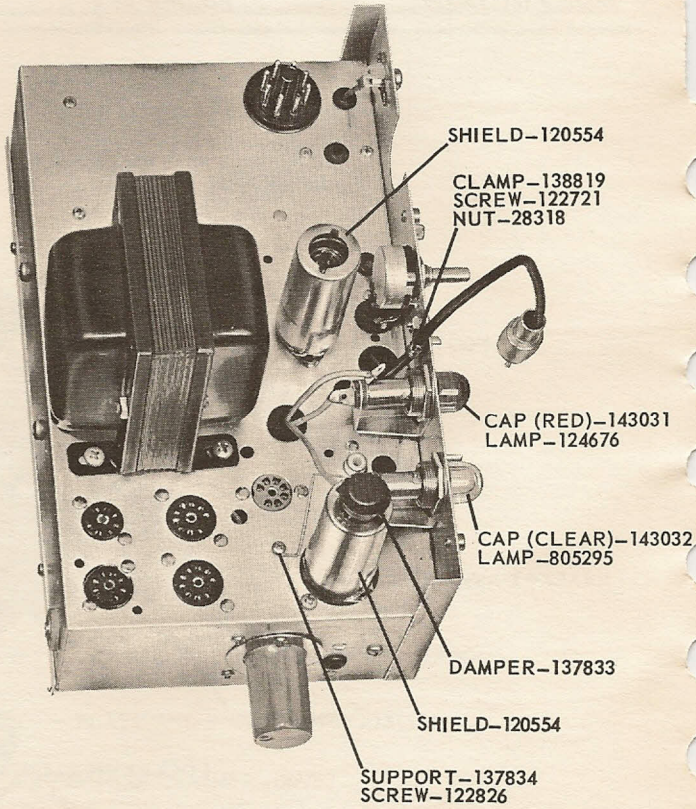

FIGURE 74

Pages 27-30 of this document are in a separate PDF file also located at
http://www.apecity.com/manuals

Those pages are in a separate file because they are double-size pages. The document can be a hassle to view when the two are mixed.

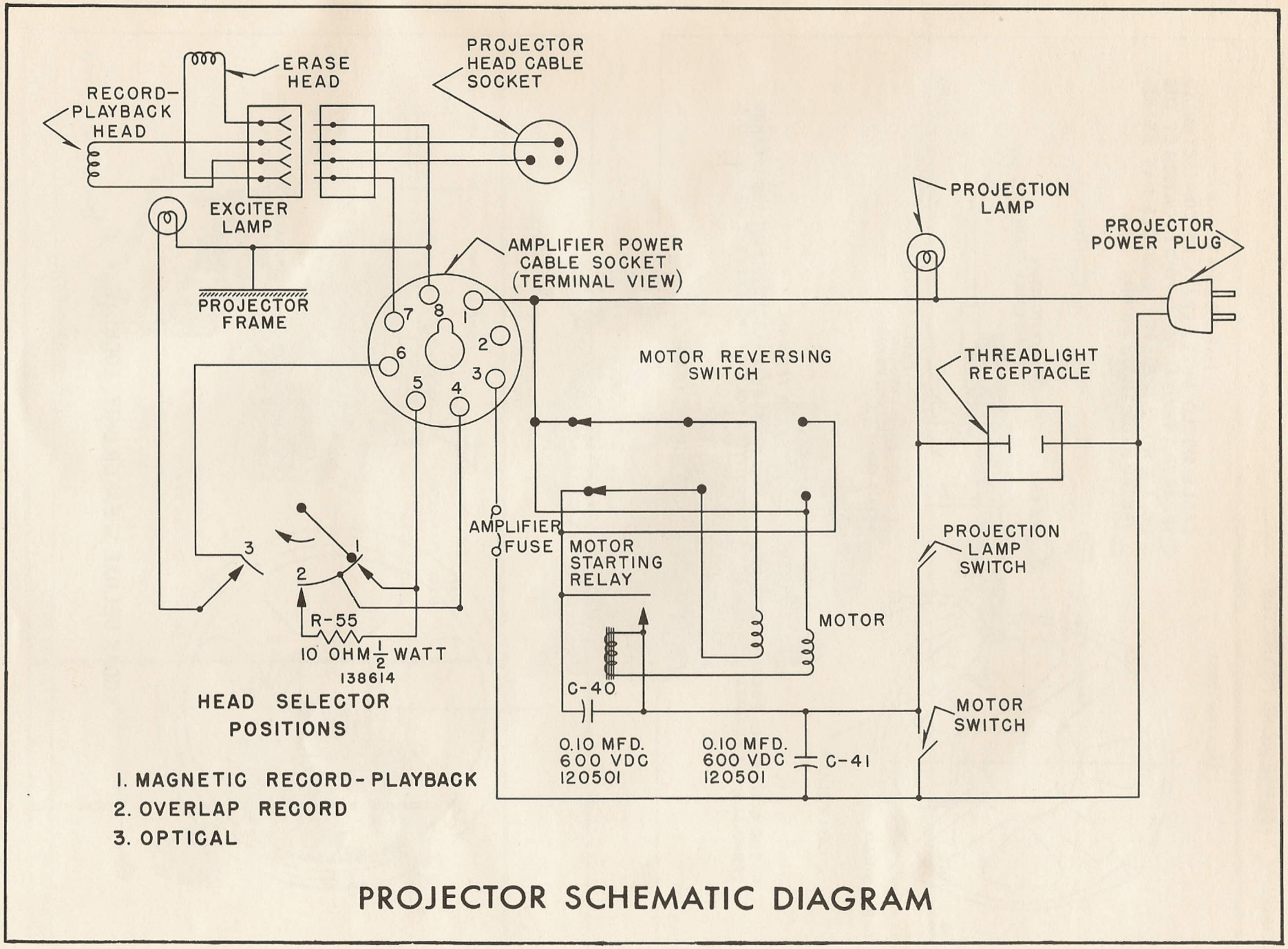

PROJECTOR SCHEMATIC DIAGRAM

Figure 79

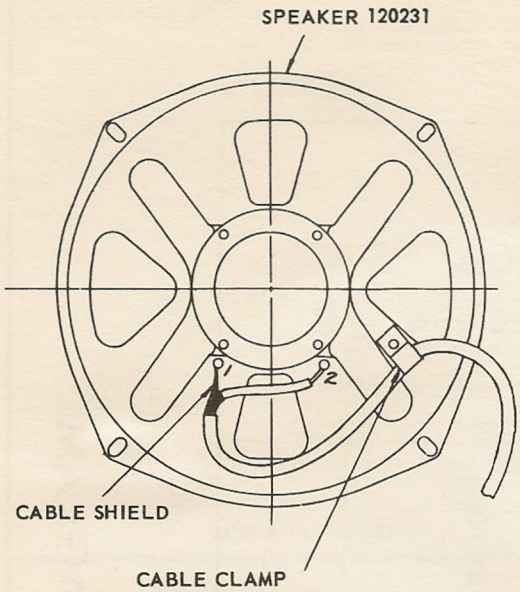

IMPORTANT

CABLE SHIELD MUST ALWAYS BE CONNECTED TO SPEAKER TERMINAL NO. 1. THE LOCATION OF THE NO. 1 & NO. 2 SPEAKER TERMINALS MAY BE REVERSED FROM THOSE SHOWN.

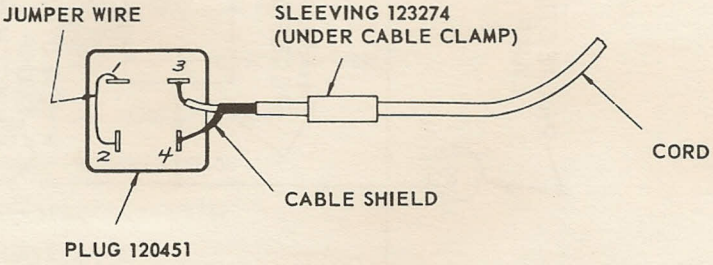

HOW TO DETERMINE NO. 1 SPEAKER TERMINAL

IF THE CONE MOVES FORWARD WHEN A FLASHLIGHT BATTERY IS PLACED ACROSS THE SPEAKER TERMINALS, THE TERMINAL CONNECTED TO THE POSITIVE POLE OF THE BATTERY WILL BE NO. 1.

SPEAKER AND CABLE WIRING DIAGRAM

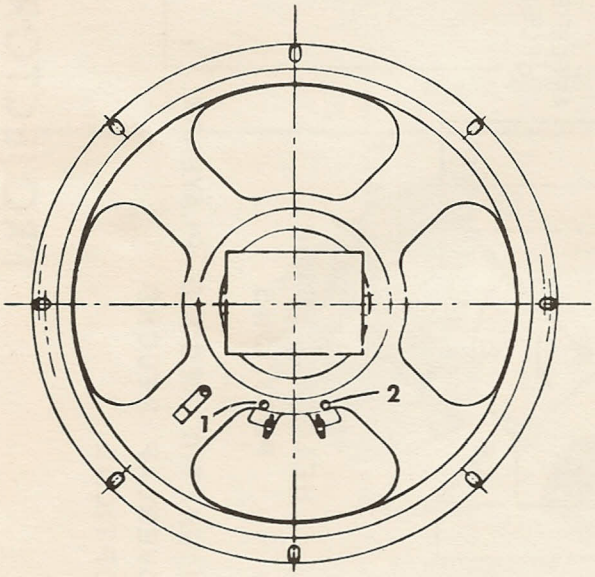

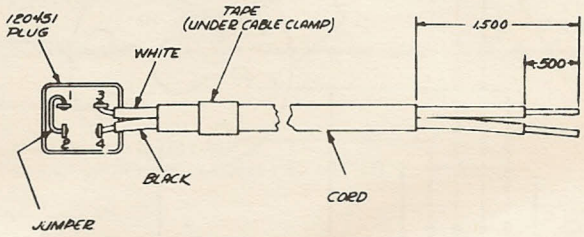

NOTE:
CONNECT BLACK LEAD TO SPEAKER TERMINAL NO. 1
CONNECT WHITE LEAD TO SPEAKER TERMINAL NO. 2

KODAK DELUXE SPEAKER UNIT, MODEL A

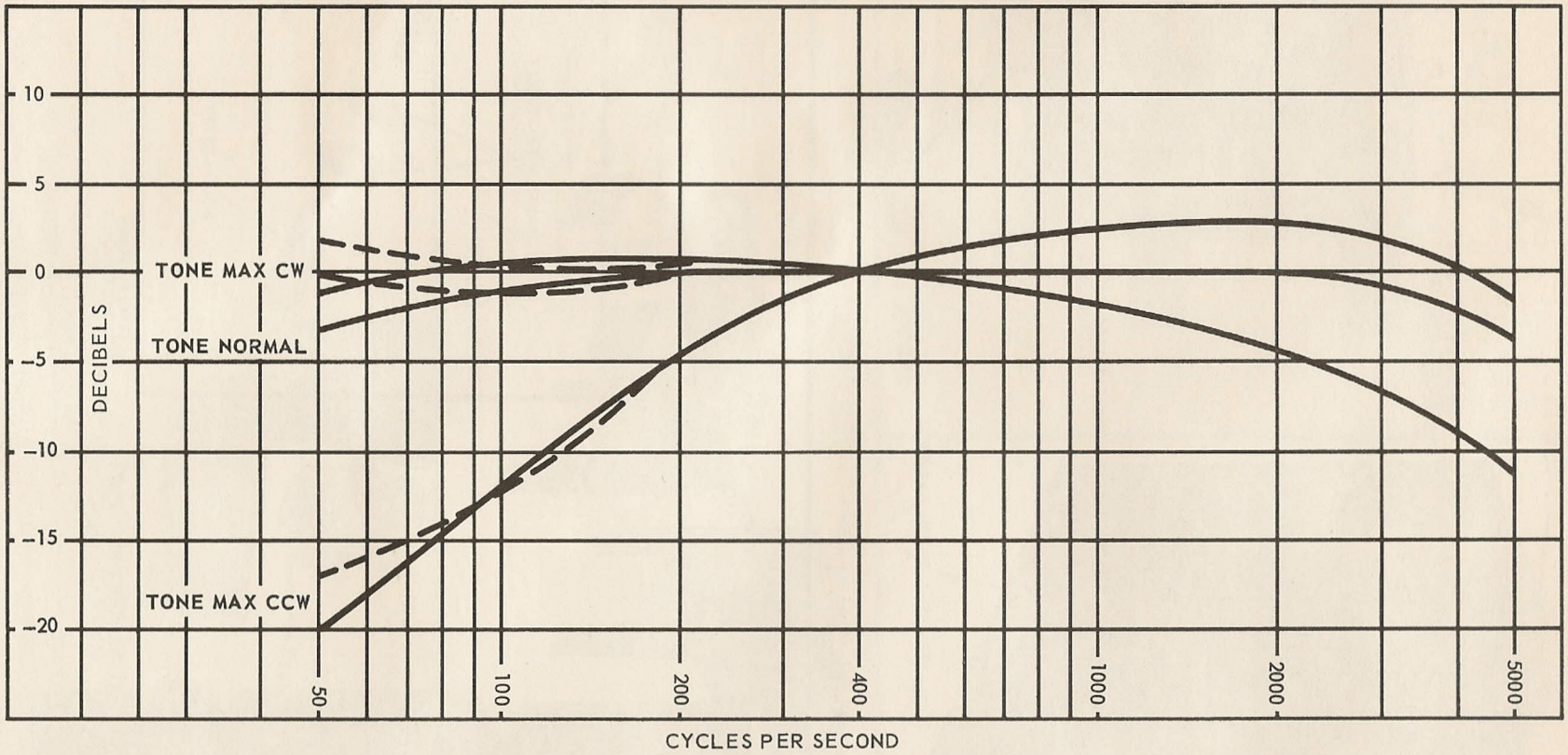

——OPTICAL PLAY FROM SMPTE OPTICAL FREQUENCY TEST FILM

- - - MAGNETIC PLAY FROM SMPTE MAGNETIC FREQUENCY TEST FILM

KODAK PAGEANT SOUND PROJECTOR MAGNETIC-OPTICAL FREQUENCY RESPONSE CURVES

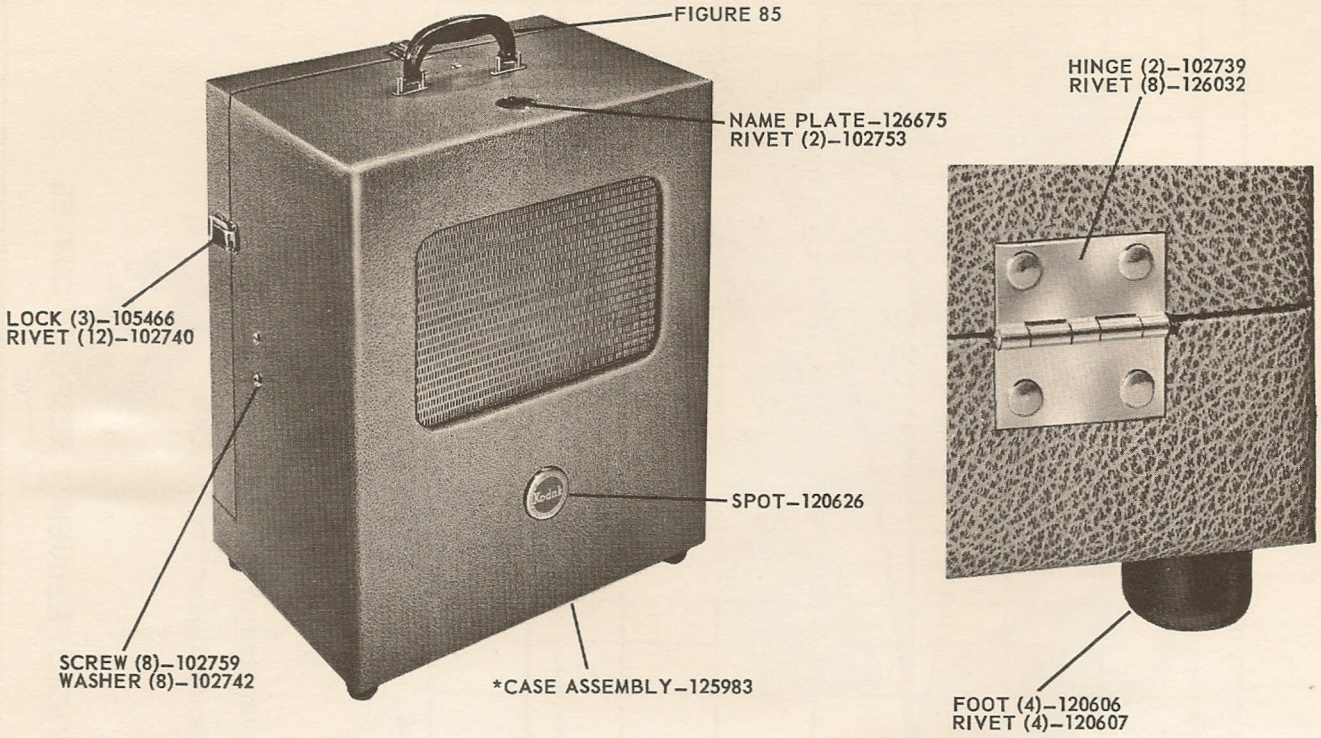

*Does not include speaker, cord, reel support and their attaching parts

FIGURE 80

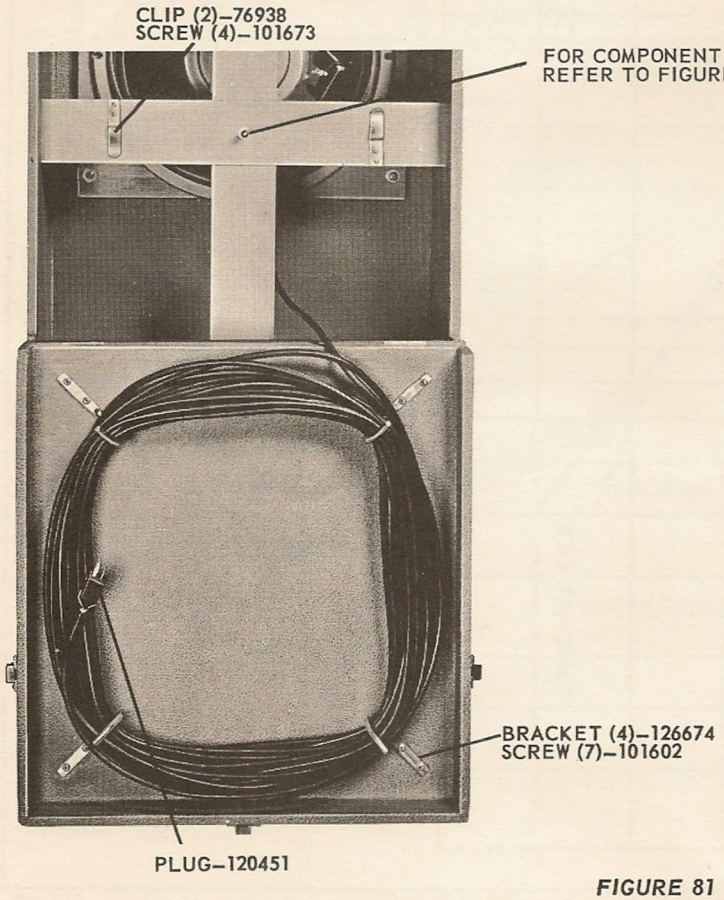

FIGURE 81

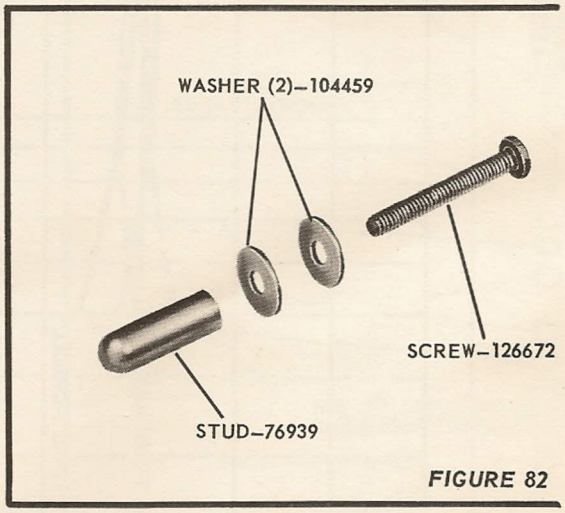

FIGURE 82

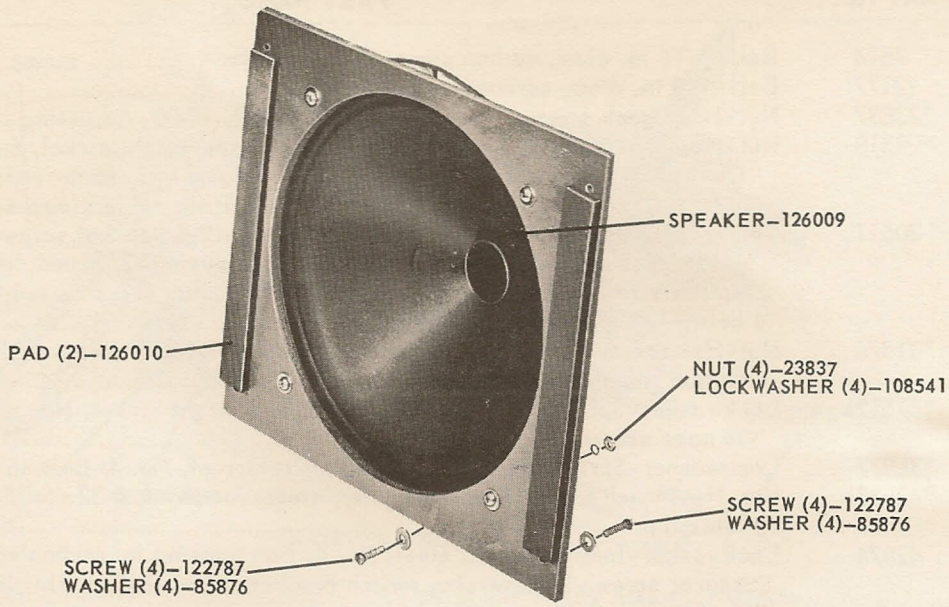

FIGURE 83

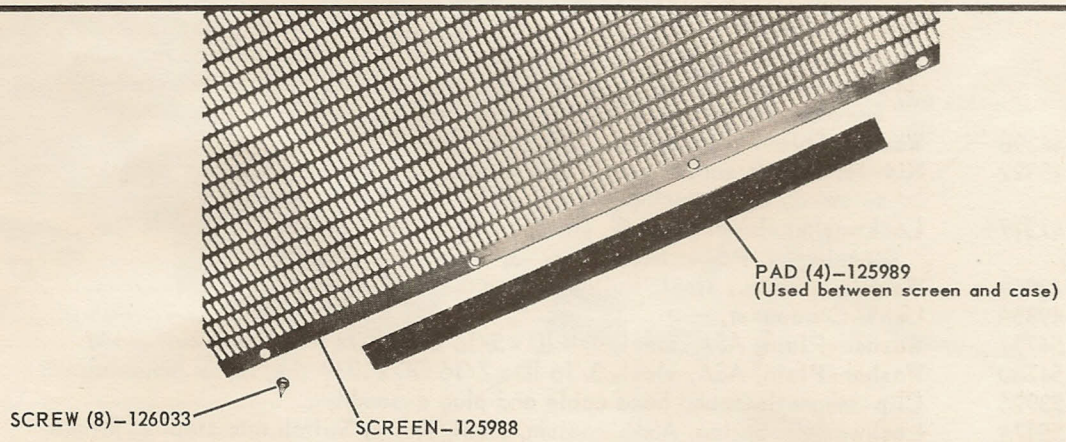

FIGURE 84

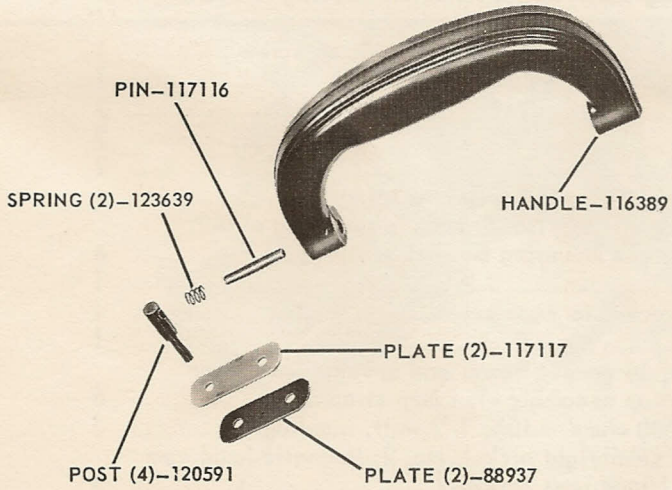

FIGURE 85

KODAK 35 FT SPEAKER EXTENSION CORD

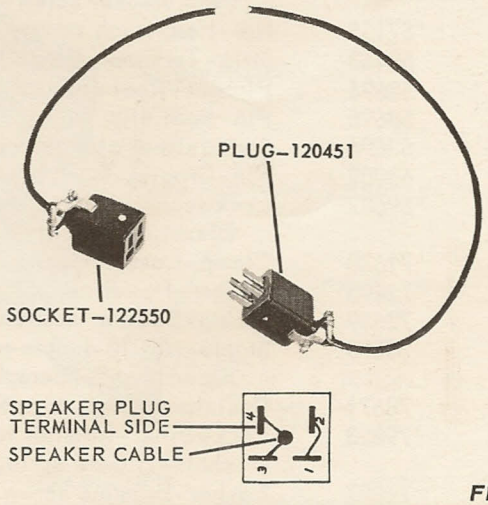

FIGURE 86

FIG.	PART NO.	PART NAME	REQD.
44	7514	Ball - 3/16 in. diam, carbon steel; Pulldown pivot	1
44	12177	Ball - 1/8 in. diam, carbon steel; Pulldown bearing	2
27,28	*23837	Nut - Hex, mach screw, steel, semibright nickel, 10-32; Adjusting	2
20,21,74	*28318	Nut - Hex, mach screw, double chamfer, steel, semibright nickel, 6-32 x 5/16; Control switch panel to mechanism housing screw–1, Motor connector terminal screw–2, Magnetic sound head amplifier cable clamp screw–1	4
21,24, 33,45, 54,57	30511	Lockwasher - Internal tooth, steel, No. 4; Threadlight socket screw–2, Shift lever latch mounting bracket to mechanism housing–2, Sound drum braking spring screw–2, Framing pivot screw–1, Damping cup screw–1, Take-up belt guard to mechanism housing–2	10
75	*31576	Nut - Hex, mach screw, steel, semibright nickel, 8-32; Power transformer–4, Output transformer–2	6
63	*37512	Lockwasher - Spring, ASA, medium, steel, semibright nickel, No. 10; Speaker to case screw	2
17	*38877	Lockwasher - Spring, ASA, medium, steel, rustproof, No. 4; Belt shifting shaft	1
66	*42533	Nut - Hex, mach screw, double chamfer, steel, rustproof, 6-32 x 5/16; Handle retaining	2
10,12, 14,20, 21,24, 44,55, 58,71	42874	Lockwasher - Internal tooth, steel, No. 6; Fan housing to mechanism housing spacer screw–1, Reversing switch bracket screw–2, Belt shifting lever detent spring screw–2, Control switch panel to mechanism housing screw–2, Terminal strip screw–1, Motor connector terminal screw–2, Tension clutch bracket screw–1, Mechanism housing to sound head bracket screw–3, Claw retaining spring to claw pivot plate screw–1, Shutter bearing retaining screw–2, Rewind detent spring screw–1, Rewind shift lever screw–2, Take-up arm grounding connector screw–1	21
30,31	44398	Washer - Shield clamping–2, Erase arm–1	3
21,35,36	*45322	Nut - Hex, mach screw, steel, semibright nickel, 4-40; Threadlight socket screw–2, Buzz track adjusting screw–1, Azimuth adjusting screw–1	4
13,75	47317	Lockwasher - Internal tooth, steel, No. 8; Motor mounting bracket to fan housing–4, Power transformer–3, Output transformer–2	9
43	48969	Washer - .010 in., steel; Pulldown cam	AR
15	49859	Lens - Condenser, rear	1
11	54777	Washer - Plain, ASA, steel, 1/8 ID x 5/16 OD x .032 thk; Drive belt guide	1
13	54780	Washer - Plain, ASA, steel, 3/16 ID x 7/16 OD x .049 thk; Motor mounting	4
22	53926	Clip - Magnetic sound head cable and plug assembly	1
39,46,55	55176	Lockwasher - Spring, ASA, medium, steel, No. 4; Switch arm stop–2, Stroke adjusting eccentric screw–1, Claw pivot plate spacer screw–1, In-and-out spring screw–2	6
17	57020	Washer - .020 in., steel; Belt shifting shaft	AR
17,24	57129	Washer - .010 in., steel; Belt shifting shaft–AR, Mechanism housing to sound head bracket screw–3	AR
42	*57155	Nut - Hex, mach screw, steel, rustproof, 4-40; Lamp socket clamp screw	1
75	58443	Strip - Terminal, Cinch No. 1520 lug type or equiv	1
7	58694	Plunger - Reel clip	2
7	58695	Pin - Reel clip	2
7	58696	Spring - Reel clip plunger	2
6	68052	Pin - Groove, Type 1, steel, 1/16 x 3/8; Rewind pulley to spindle	1
66,70	*69682	Lockwasher - Internal tooth, steel, rustproof, No. 6; Handle retaining nut–2, Elevating lock spring to take-up arm mounting bracket screw–2	4
42	71638	Clamp - Lamp socket	1
63	72493	Washer - Power and speaker cord bracket to case screw	4
3	72659	Spring - Exciter lamp cover	1
63	78590	Staple - No. 10 double-pointed tack, 16 gauge; Power and speaker cord strap assembly–1, Microphone cord strap assembly–1, Lamp strap–4	6
75,77	78671	Resistor - Fixed, composition, 47,000 ohms ± 10%, 1/2 watt, insulated	3
38,48	*79023	Lockwasher - Internal tooth, steel, semibright nickel, No. 2; Magnetic head cam shaft–1, Gate spring screw–2, Hinge post screw–2	5
45	79097	Washer - Framing screw	2

* Standard parts except for finish
AR Signifies As Required

FIG.	PART NO.	PART NAME	REQD.
75	*80753	Lockwasher - Internal tooth, steel, semibright nickel, 3/8 in., Microphone connector–2, Selector switch–3	5
14	83373	Reflector	1
1,58	*85876	Washer - Plain, ASA, steel, semibright nickel, 1/4 ID x 9/16 OD x .065 thk; Fan housing to case screw–1, Rewind shift plate spacing–1	2
35	86892	Washer - Sound optics bracket clamping screw	1
41	87777	Screw - Socket	2
64,66	88937	Plate - Bottom	3
17	*90606	Washer - Plain, ASA, steel, rustproof, 1/8 ID x 5/16 OD x .032 thk; Belt shifting shaft.	1
38,54	*90630	Washer - Plain, ASA, steel, semibright nickel, 3/32 ID x 1/4 OD x .020 thk; Magnetic head cam shaft–1, Damping roller screw–1	2
43	92950	Washer - .005 in., steel; Pulldown cam	AR
51,53	93845	Washer - Sprocket roller	AR
50	*101411	Screw - Mach, Phillips rd hd, steel, semibright nickel, 6-32 x 5/8; Upper sprocket stripper sleeve to mechanism housing	1
45	101470	Screw - Mach, miniature hd, steel, semibright nickel, 4-40 x 1/4; Framing lever stop to mechanism housing	1
63	*101639	Screw - Wood, Phillips rd hd, steel, semibright nickel, No. 4 x 3/8; Fuse clip	1
65	*101654	Screw - Wood, Phillips rd hd, steel, semibright nickel, No. 2 x 1/4; Instruction plate	4
63	*101659	Screw - Wood, Phillips rd hd, steel, semibright nickel, No. 6 x 3/8; Exciter lamp clip–1, Microphone mounting bracket to case–2	3
63	*101742	Screw - Wood, Phillips flat hd, steel, semibright nickel, No. 2 x 3/8; Power and speaker cord strap stud–1, Micro cord strap stud–1	2
62	102740	Rivet - Split; Case lock–8, Hinge–8	16
65,66,69	102742	Washer - Finishing; Sound drum shaft–2, Mounting bracket–5	7
30	102963	Screw - Record head shield	2
18	103825	Ring - Retaining; Belt shifting rollers	2
63	*104349	Wing Nut - Steel, semibright nickel, 1/4-20; Reel support bolt	1
42,78	104947	Socket - Lamp (ceramic)	1
62	105466	Lock - Case	2
11,16, 22,56,59	107101	Setscrew - Hex socket hd, cone point, steel, 5-40 x 3/16; Motor drive pulley–1, Speed changing knob–2, Safety arm hub–1, Gear (sun) and sprocket retaining–1, Worm–2	7
75	108544	Stop Nut - Resilient tube mounting	2
8	108546	Nut - Left hand; Flywheel retaining	1
63	109436	Stud - Power cord strap–1, Micro cord strap–1	2
32	*109571	Setscrew - Hex socket hd, cone point, steel, rustproof, 4-40 x 1/8; Sound drum reverse drive ratchet	1
3,25	109791	Ring - Retaining; Exciter lamp cover screw–1, Clutch mounting stud–1	2
75,77	112546	Resistor - Fixed, composition, 2,700 ohms ± 10%, 1/2 watt, insulated	3
41	116262	Washer - .020 in., steel; Lamp socket screw	AR
75	116264	Rivet - Resilient tube mounting	2
21,75	116266	Rivet - Steel, nickel, .120 diam x .141 lg; Grounding terminal to control switch panel–1, Speaker socket–2, Phenolic mounting wafer–4, Hum balance control–2, Tube sockets to shassis–12, Phono input socket–4, Terminal strips–3, Bias control–2	30
11	117047	Plate - Fan housing	1
62	117112	Hinge Section - Male, short	1
62	117113	Hinge Section - Male, long	1
64,66	117116	Pin - Handle	4
64,66	117117	Plate - Top	4
15	117164	Spring - Condenser lens retaining	1
15	117165	Spring - Lens separator	1
42	117166	Ejector - Lamp	1
66,69	*117228	Screw - Mach, Phillips oval hd, brass, transparent lacquer, 6-32 x 5/8; Mechanism mounting bracket to case–1, Take-up arm mounting bracket to case–2	3
1	117229	Screw - Mach, Phillips oval hd, brass, transparent lacquer, 8-32 x 3/4; Amplifier to case	2

* Standard parts except for finish
AR Signifies As Required

FIG.	PART NO.	PART NAME	REQD.
32	117311	Plate - Bearing retaining	1
8	117539	Flywheel	1
46	117543	Plate - Claw pivot	1
44	117545	Spring - Claw retaining	1
46	117547	Eccentric - Stroke adjusting	1
45	117548	Pivot - Framing lever	1
46	117549	Spacer - Claw pivot plate	1
60	117550	Retainer - Snap ring	1
42	117562	Ring - Lamp ejector	1
43	117705	Cam - Pulldown	1
43	117706	Cam - In-and-out	1
60	117707	Shaft - Shutter	1
60	117708	Ring - Snap; Shutter shaft	1
54	117713	Cup - Damping bearing	1
33	117722	Shaft - Pressure roller	1
59	117725	Worm	1
70	117732	Spring - Elevating mechanism	1
36	117736	Sound Optics Assembly	1
61	117750	Bearing - Front shutter shaft	1
51,53	117762	Spring - Sprocket roller, rear	4
61	117771	Bearing - Sprocket shaft	2
75	119833	Socket - Amphenol No. 147-500 or equiv; 7-pin miniature tube	2
75,76,77	120087	Condenser - Molded tubular, 0.1 mfd, 400 V, Sprague No. 67P10404 or equiv	3
73	120092	Pin - Groove, Type 2, steel, semibright nickel, 1/16 x 5/8; Switch locking plate actuating	1
47	120209	Support - Upper loop	1
75	120213	Sleeve - Amplifier spacer	3
63	120231	Speaker - 8 in. P.M., 6 ohm voice coil	1
58	120243	Shaft - Rewind shift plate	1
8	120244	Belt - Take-up	1
46	120245	Washer - Spring; Pivot plate	2
4	120246	Spot - Kodak, 1 in. diam	1
14	120248	Chimney Support and Lamp Chimney Assembly	1
45	120252	Pin - Framing lever	1
41	120335	Washer - .007 in., steel; Lamp socket screw	AR
70	120386	Ring - Retaining; Elevating mechanism shaft	1
23	120399	Case - Phototube	1
68	120410	Pin - Take-up reel support	1
25,75	120422	Washer - Tension clutch spacing–1, Mounting grommet–3	4
23	120428	Spacer - Insulating; Phototube case	2
23	120430	Washer - Insulating; Phototube case	2
23	120432	Clamp - Phototube case cover	1
33	120438	Link - Pressure roller equalizing	1
21,78	120443	Socket - Threadlight	1
13,61,75	120444	Grommet - Support mounting–3, Amplifier mounting–3	6
13,61	120445	Sleeve - Motor mounting–4, Upper spacer–3	7
1	120446	Washer - Finishing; Amplifier mounting screw	3
26,45	120447	Ring - Retaining; Shifting lever latch pivot–2, Framing shaft–1	3
63	120451	Plug - Jones Type P-304-CCT with screws 5/16 in. lg; Speaker	1
51,53	120453	Ring - Retaining; Sprocket roller shaft	4
32	120456	Ball Bearing - Flywheel shaft	1
23	120459	Grommet - Phototube case mounting	2
34	120466	Spring - Sound optics bracket	1
35	120468	Eccentric - Sound optics bracket	1
36	120471	Post - Sound optics mounting adjusting	1
36	120475	Spring - Sound optics mount	1
36	120476	Nut - Sound optics mounting adjusting	1
37	120483	Rod - Sound pickup	1

AR Signifies As Required

FIG.	PART NO.	PART NAME	REQD.
51,53	120486	Spring - Detent; Sprocket guard	2
50	120487	Sleeve - Upper sprocket stripper	1
41	120490	Spring - Lamp ejector	1
71	120491	Foot - Elevating mechanism, short	1
12,78,79	120501	Condenser - 0.1 mfd, 600 VDC, Sprague Cat. No. 73P10406 or approved equiv; Fan housing and motor assembly–1, Control switch panel assembly–1	2
75,77	120511	Resistor - Fixed, composition, 510,000 ohms ± 5%, 1/2 watt, insulated	2
75,76,77	120512	Resistor - Fixed, composition, 1.5 meg ± 10%, 1/2 watt, insulated, Allen Bradley Type EB or equiv for low noise level	3
74	120554	Shield - Miniature tube	2
75	120556	Wafer - Phenolic mounting for 1 in. electrolytic condenser, Cornell-Dubilier Cat. No. 19884 or equiv	2
75	120557	Socket - Jones Cat. No. S-304-AB; Speaker	1
45	120562	Washer - Thrust, thin; Framing knob	AR
45	120563	Washer - Thrust, thick; Framing knob	AR
21,78	120571	Cord - Power, 12 ft long	1
1	120573	Knob - Tone control	1
51	120579	Upper Sprocket Plate and Pin Assembly	1
23	120585	Insulator - Phototube case	1
64,66	120591	Post - Handle	6
66	120592	Post - Handle and suspension	2
1,62	120606	Foot	4
62	120607	Rivet - Split, steel, rustproof, .156 x 7/8; Foot	3
62	120626	Spot - Kodak, 2 in. diam	1
71	120634	Foot - Elevating mechanism, long	1
34,78	120636	Insulator - Exciter lamp contact	2
34,51,53	120642	Washer - Loop restorer pivot–1, Sprocket roller shaft–8	9
9	120647	Clamp - Phototube cable–1, Amplifier power cable assembly–2	3
75,76	120670	Sleeving - Resistor	5
7	120672	Clip - Reel	2
59	120674	Ball Bearing - Shutter shaft	1
75	*120708	Screw - Tapping, Type F, Phillips pan hd, steel, semibright nickel, 4-40 x 1/4; Exciter lamp control to spacer	2
62	121227	Hinge Section - Female	2
30	121259	Setscrew - Hex socket hd, cup point, steel, 4-40 x 1/8; Friction plug retaining	1
59	121495	Shutter Shaft and Snap Ring Assembly	1
1	121497	Lamphouse Top Assembly	1
43	121502	Shutter and Lug Assembly	1
44	121503	Claw Assembly	1
51,53	121507	Sprocket Roller Plate Assembly	2
14	121510	Condenser Mount Assembly	1
33	121517	Pressure Roller Arm Assembly	1
76,77	122538	Resistor - Fixed, composition, 1.0 meg ± 10%, 1/2 watt, insulated	3
63	122608	Bracket - Power cord	2
63	122612	Strap - Lamp, small	1
63	122613	Strap - Lamp, large	1
35,45,46	*122666	Screw - Mach, Phillips pan hd, steel, semibright nickel, 4-40 x 3/8; Sound optics bracket eccentric to sound optics bracket–1, Framing lever pivot to mechanism housing–1, Claw pivot plate to mechanism housing–2	4
63	*122686	Screw - Wood, Phillips rd hd, steel, semibright nickel, No. 8 x 1/2; Power and speaker cord bracket to case	4
63	122687	Power and Speaker Cord Strap Assembly	1
24,58	*122691	Screw - Mach, Phillips pan hd, steel, semibright nickel, 6-32 x 1/4; Magnetic sound head projector cable clamp–2, Tension clutch bracket–1, Rewind shift lever detent spring to mechanism housing–1	4
11,14	*122701	Screw - Mach, Phillips pan hd, steel, rustproof, 4-40 x 1/4; Fan housing plate to fan housing–3, Chimney support–4	7
1	*122713	Screw - Mach, Phillips pan hd, steel, semibright nickel, 6-32 x 1/2; Mounting flange to case brackets	3

* Standard parts except for finish
AR Signifies As Required

FIG.	PART NO.	PART NAME	REQD.
10,20,24	*122715	Screw-Mach, Phillips pan hd, steel, semibright nickel, 6-32 x 3/8; Mechanism housing to fan housing–2, Control switch panel to mechanism housing–1, Sound head bracket to mechanism housing–2	5
5,14, 41,44, 55,71,73	*122716	Screw-Mach, Phillips pan hd, steel, semibright nickel, 6-32 x 3/16; Supply arm plate to mechanism housing–1, Belt shifting lever detent spring–2, Lamp ejector spring to mechanism housing–1, Claw retaining spring to claw pivot plate–1, Shutter bearing retaining–2, Take-up arm grounding connector screw–1, Terminal board to chassis–1	9
24,33, 39,47, 54,55,75	*122717	Screw-Mach, Phillips pan hd, steel, semibright nickel, 4-40 x 3/16; Shift lever latch mounting bracket to mechanism housing–2, Sound drum braking spring to sound head bracket–2, Magnetic head mounting plate to sound head–1, Upper and lower loop supports to mechanism housing–4, Damping bearing cup to damping bearing shaft–1, Film gate catch to mechanism housing–1, Exciter lamp control to chassis–2	13
75	*122718	Screw-Mach, Phillips pan hd, steel, semibright nickel, 6-32 x 5/8; Resilient tube socket mounting	2
1,20, 32,34, 35,37, 40,47,57	*122719	Screw-Mach, Phillips pan hd, steel, semibright nickel, 4-40 x 1/4; Amplifier cover panel to amplifier–4, Control switch panel to sound head bracket–1, Bearing retaining plate to sound head bracket–3, Sound optics bracket retaining spring to sound head bracket–1, Sound optics bracket clamping–1, Erase head retracting assembly–1, Rear switch mounting plate to sound head–1, Aperture plate to mechanism housing–2, Take-up belt guard to mechanism housing–2	16
35,55	*122720	Screw-Mach, Phillips pan hd, steel, semibright nickel, 4-40 x 5/16; Sound optics–1, In-and-out spring–2	3
9,20,21, 52,58, 70,74	*122721	Screw-Mach, Phillips pan hd, steel, semibright nickel, 6-32 x 5/16; Phototube cable clamp to fan housing–1, Amplifier power cable clamp–1, Control switch panel to mechanism housing–1, Motor connector to control switch panel–2, Upper sprocket plate to mechanism housing–1, Lower sprocket plate to mechanism housing–2, Rewind shift plate shaft–1, Chain tension adjustment stud–1, Elevating mechanism locking spring assembly to take-up arm mounting bracket assembly–2, Magnetic head amplifier cable clamp–1	13
24	*122722	Screw-Mach, Phillips pan hd, steel, semibright nickel, 6-32 x 7/8; Sound head bracket to mechanism housing	1
23	*122723	Screw-Mach, Phillips pan hd, steel, semibright nickel, 4-40 x 1/2; Phototube case to sound head bracket	2
21,39	*122728	Screw-Mach, Phillips pan hd, steel, semibright nickel, 4-40 x 7/16; Thread-light socket to control switch panel–2, Magnetic head mounting plate to sound head–2	4
35	*122730	Screw-Mach, Phillips pan hd, steel, semibright nickel, 4-40 x 5/8; Exciter lamp contact cover	2
63	*122751	Screw-Mach, Phillips pan hd, steel, semibright nickel, 10-32 x 5/8; Speaker to case	2
13,75	*122754	Screw-Mach, Phillips pan hd, steel, semibright nickel, 8-32 x 1/4; Motor mounting bracket to fan housing–4, Output transformer–2, Power transformer–4	10
13	*122788	Screw-Mach, Phillips pan hd, steel, rustproof, 8-32 x 5/8; Motor mounting	4
29,48	*122814	Screw-Mach, Phillips pan hd, steel, semibright nickel, 2-56 x 3/16; Magnetic head mounting block to mounting plate–2, Gate mounting spring to hinge post–2	4
74,75	*122826	Screw-Tapping, Type B, Phillips pan hd, steel, semibright nickel, No. 4 x 3/16; Tube damper support to chassis–1, Bottom cover–4, Shield No. 1–2, Shield No. 2–2, Electrolytic condenser mounting bracket–2, Input transformer clamping ring–2	13
54	*122841	Screw-Mach, Phillips pan hd, steel, semibright nickel, 2-64 x 3/16; Damping roller	1
48	*123056	Screw-Mach, Phillips pan hd, steel, semibright nickel, 2-56 x 1/4; Hinge post to aperture plate	2

* Standard parts except for finish

FIG.	PART NO.	PART NAME	REQD.
42	*123081	Screw - Mach, Phillips pan hd, steel, rustproof, 4-40 x 5/8; Lamp socket clamp	1
21,78	123133	Switch - Control	2
63	123274	Tubing - 5/32 ID x 3/8 OD x 1 lg; Speaker plug clamp	1
8	123363	Washer - Flywheel	1
75	123400	Washer - Control spacer	3
17,27	123401	Washer - .005 in; steel; Belt shifting shaft–AR, Magnetic head separator–1	AR
2,3,73	*123633	Screw - Tapping, Type B, Phillips pan hd, steel, semibright nickel, No. 2 x 1/8; Amplifier name plate to amplifier cover panel–2, Fidelity plate to exciter lamp cover–2, Selector switch lock to chassis–2	6
63	123636	Clip - Exciter lamp	1
64	123639	Spring - Handle	1
31	123663	Screw - Mach, miniature hd, steel, semibright nickel, 0-80 x 1/8; Erase arm retaining–1, Erase arm pivot retaining–1	2
12,78	123760	Sleeving - Insulator	2
68	123840	Arm - Take-up reel support (pivoted)	1
17	123842	Spring - Belt shifting lever detent	1
18	123848	Roller - Belt shifting, left	1
5,67	123850	Pivot - Reel arm	2
5	123851	Belt - Rewind	1
6	123854	Supply Arm and Bearing Assembly	1
5	123855	Plate - Supply arm	1
5,67	123856	Washer - Reel arm pivot	2
5,67	123857	Washer - Spring; Reel arm	2
57	123861	Nut - Plate; Take-up belt guard	1
45	123865	Shaft - Framing	1
45	123866	Lever - Framing	1
47	123869	Support - Lower loop	1
58	123885	Spring - Rewind shift lever detent	1
1	123888	Handle - Elevating mechanism	1
70	123889	Plate - Clamping; Elevating bar	1
70	123890	Anchor - Elevating spring	1
67	123893	Plate - Take-up arm	1
68	123894	Spring - Take-up reel support	1
10	123898	Spacer - Fan housing to mechanism housing	1
66	123912	Bracket - Mechanism mounting, upper	1
71	123917	Pin - Groove, Type 1, steel, 3/32 x 5/8; Elevating mechanism cam	1
68	123954	Take-Up Reel Support Link Assembly	1
70	123955	Elevating Mechanism Locking Spring Assembly	1
5	123959	Pivoted Supply Arm Assembly	1
57	123963	Take-Up Belt Guard Assembly	1
57	123966	Lower Sprocket Gear and Shaft Assembly	1
65,69	*123968	Screw - Mach, Phillips oval hd, brass, transparent lacquer, 6-32 x 7/8; Sound drum shaft stop–2, Take-up arm mounting bracket assembly to case–2	4
71	123969	Stop - Elevating mechanism bar	1
10	*123970	Screw - Mach, Phillips pan hd, steel, semibright nickel, 6-32 x 1-3/4; Fan housing to mechanism housing	1
17	123971	Ring - Retaining; Belt shifting shaft	1
5,67	124128	Lockwasher - Reel arm pivot	2
8	124214	Washer - Spring; Flywheel	1
1	124355	Screw - Mach, Phillips pan hd, brass, 8-32 x 1; Fan housing to case	1
1	124404	Sleeve - Spacer; Fan housing to case	1
54	124606	Damping Arm Assembly	1
75	124676	Lamp - 6–8 volt, miniature bayonet base, GE No. 44; Warning	1
1	*124762	Screw - Mach, Phillips oval hd, brass, transparent lacquer, 8-32 x 1; Amplifier to case back	1
22,37, 50,52	124832	Screw - Mach, miniature hd, steel, semibright nickel, 2-56 x 3/16; Magnetic sound head projector cable clip–1, Sound pickup rod to sound head–1, Sprocket end plate to sprocket hub–6	8

* Standard parts except for finish
AR Signifies As Required

FIG.	PART NO.	PART NAME	REQD.
6	124834	Supply Arm Spindle and Pulley Assembly	1
44	125104	Spring - Claw return	1
54	125219	Roller - Damping	1
21,65, 66,69,71	125349	Washer - Grounding terminal to control switch panel–1, Sound drum shaft–2, Mechanism mounting bracket to case–1, Take-up arm mounting bracket to case–4, Take-up arm grounding connector–1	9
1	125359	Washer - .062 in.; Elevating foot	AR
1	125360	Washer - .040 in.; Elevating foot	AR
71	125520	Pin - Groove, Type 3, steel, semibright nickel, 1/8 x 3/4; Take-up arm stop	1
51,53,55	125789	Ball - .1875 diam precision, nylon; Sprocket guard stop pin–2, Lens retainer–1	3
1	125854	Grommet - Fan housing mounting	2
75	125906	Sleeving - Power socket terminals 1 and 3	2
44	125913	Insert - Pulldown spring damping	1
75,77	126100	Resistor - Fixed, composition, 100,000 ohms ± 10%, 1/2 watt, insulated	2
75,77	126101	Resistor - Fixed, composition, 470,000 ohms ± 10%, 1/2 watt, insulated	7
75,77	126102	Resistor - Fixed, composition, 130,000 ohms ± 5%, 1/2 watt, insulated	2
75,77	126106	Control - 40 ohms, Muter Type B; Hum balance	1
75,76,77	126124	Condenser - Electrolytic, 50 mfd, 6 VDC, Sprague Type 18D3	3
75	126126	Socket - Phono input	2
75	126129	Connector - Microphone	1
75	126130	Tube - 12AX7, RCA, Sylvania or equiv	1
75	126131	Grommet	4
75	126132	Grommet	2
13,78	126198	Motor	1
18	126200	Roller - Belt shifting, right	1
30	126241	Block - Magnetic head mounting	1
29	126248	Cam - Record head adjusting	1
38	126249	Shaft - Magnetic head cam	1
28	126250	Spring - Magnetic head return	1
31	126251	Pivot - Erase arm	1
40	126254	Insulator - Magnetic head contact, thin	1
12	126261	Bracket - Reversing switch	1
31	126266	Spring - Erase head tension	1
30	126268	Plug - Friction	1
30	126269	Spring - Record head mounting	1
27	126272	Spring - Magnetic head spacer	1
39	126277	Stop - Switch arm	2
31	126281	Erase Head Assembly	1
32	126283	Ratchet - Sound drum reverse drive	1
68	126284	Pawl	1
12	126290	Spacer - Reversing switch bracket	2
2	126293	Cover Panel and Extension Assembly	1
62	126295	Case Complete Assembly	1
65	126310	Screen - Ventilating hole	2
13	126314	Housing - Fan	1
61	126315	Mechanism Housing Assembly	1
56	126318	Spider - Reversing mechanism	1
56	126319	Gear - Reversing mechanism internal	1
56	126320	Gear - Reversing mechanism planetary	2
56	126321	Gear (Sun) and Sprocket - Reversing mechanism	1
58	126324	Upper Sprocket Gear and Shaft Assembly	1
58	126326	Pulley - Rewind drive	1
58	126328	Plate - Rewind shift	1
32	126332	Chain - Sound drum reverse drive	1
75	126333	Spacer - Resilient tube mounting	4
75	126334	Plate - Stop	1
75	126335	Spacer - Exciter lamp control	2
75	126336	Mount - Resilient tube	1

AR Signifies As Required

FIG.	PART NO.	PART NAME	REQD.
75	126344	Shield No. 1	1
75	126345	Shield No. 2	1
73	126347	Cover - Chassis base	1
12	*126355	Screw - Mach, Phillips pan hd, steel, semibright nickel, 6-32 x 1-5/8; Reversing switch bracket	2
75,77	126385	Control - Tone with switch	1
75,77	126387	Condenser - Ceramic, .02 mfd, 450 VDC, Centralab No. DA-145-001A	6
75,77	126388	Transformer - Power	1
75,77	126391	Condenser - Electrolytic 25-25-20 mfd, 350V DC	2
75,77	126394	Resistor - Fixed, composition, 4,700 ohms ± 10%, 1/2 watt, insulated	5
75,76,77	126396	Resistor - Fixed, composition, 270,000 ohms ± 10%, 1/2 watt, insulated	4
75,76,77	126397	Resistor - Fixed, composition, 1,500 ohms ± 10%, 1/2 watt, insulated	2
75,77	126401	Resistor - Fixed, composition, 150 ohms ± 10%, 1/2 watt, insulated	2
75,77	126403	Resistor - Fixed, composition, 470 ohms ± 10%, 1 watt, insulated	1
75	126406	Plug - Amphenol No. 86-CP8 with retaining ring, grooved for .030 thk panel or equiv; Amplifier power	1
75	126407	Socket - Noval miniature, Cinch Cat. No. 12824; 9-pin miniature tube	2
75	126409	Socket - Hugh Erby Cat. No. 9737-3; 7-pin miniature turret	1
75	126410	Socket - Hugh Erby Cat. No. 9737-1; 9-pin shield base miniature turret	1
75	126414	Socket - Noval miniature, Cinch Cat. No. 12825; 9-pin shield base	1
75	126415	Socket - Pilot light, E. F. Johnson Cat. No. 147-406, red; Warning light	1
75	126416	Socket - Pilot light, E. F. Johnson Cat. No. 147-406, clear; Level indicator	1
75,77	126418	Control - Volume	2
75,77	126419	Coil - Power oscillator	1
75	126420	Switch - Selector	1
75,77	126421	Transformer - Output	1
75	126422	Tube - 5879, RCA, Sylvania or equiv	1
75	126423	Tube - 6C4, RCA, Sylvania or equiv	2
21,78	126664	Post - Fuse extractor for No. 3AG fuse, with screwdriver slot	1
21,78	126665	Fuse - Type 3AG, 2 amps, 250V max	2
63	126720	Clip - Fuse	1
65	126731	Plate - Instruction	1
24	126733	Clip - Magnetic sound head projector cable	2
32	126736	Flywheel Shaft and Sound Drum Assembly	1
39	126747	Magnetic Head Mounting Plate Assembly	1
29	126748	Record Plate and Bearing Assembly	1
31	126749	Erase Plate and Bearing Assembly	1
21	126750	Name Plate	1
50,52	126751	Plate - Sprocket end	2
50,52	126752	Sprocket - Drive	2
50,52	126753	Hub - Sprocket	2
58	126781	Screw - Mach, miniature hd, steel, 6-32 x 3/16; Rewind lever and pivot plate assembly to shift plate	2
50,52	126841	Collar - Sprocket drive	2
58	126842	Stud - Chain tension adjustment	1
37	126846	Shoe - Film support	1
37	126847	Screw - Film support shoe lock	2
40	127176	Sound Head Bracket and Bushing Assembly	1
30	127178	Shield and Recording Head Assembly	1
50,52	127183	Spring - Sprocket drive	2
50,52	127184	Stud - Sprocket drive	2
50,52	127185	Washer - Sprocket hub aligning	2
64,66	127312	Handle - Split; Case	2
28	127767	Ring - Retaining; Sound drum reverse drive sprocket	1
12,78	127768	Switch - Motor reversing	1
40	127771	Insulator - Magnetic head contact, thick	1
38	127775	Screw - Mach, Phillips pan hd, steel, 2-56 x 3/16; Magnetic head switch arm to magnetic head cam shaft	1

* Standard parts except for finish

FIG.	PART NO.	PART NAME	REQD.
68	*127780	Screw - Mach, Phillips pan hd, steel, semibright nickel, 3-48 x 3/16; Take-up spindle pawl plate retaining	1
11	127782	Fan Complete	1
68	*127783	Lockwasher - Internal tooth, steel, rustproof, No. 3; Take-up spindle pawl plate retaining screw	1
68	127791	Take-Up Spindle Assembly	1
73	127795	Lock - Selector switch	1
55	127868	Spring - In-and-out	1
58	128336	Handle - Rewind lever	1
58	128337	Extension - Rewind lever handle	1
4	128338	Screw- Lock; Lamphouse cover	1
68,75	128531	Washer - Plain, ASA, steel, semibright nickel, 1/8 ID x 1/4 OD x .022 thk; Pawl plate–1, Resilient tube mounting–1	2
1	128535	Rivet - Split, steel, rustproof, .156 x 7/8; Foot	1
73	128540	Spacer - Panel	4
58	128659	Rewind Lever and Pivot Plate Assembly	1
50,52	128660	Setscrew - Sprocket drive collar to sprocket shaft	2
3	128934	Screw - Exciter lamp cover	1
73	129016	Plate - Switch locking	1
62	129327	Speaker Screen and Grill Assembly	1
75,77	129395	Transformer - Magnetic head input	1
33	129404	Roller - Pressure	1
17	129406	Shaft - Belt shifting	1
49	129413	Spring - Pressure pad	1
48	129414	Post - Hinge	1
48	129415	Spring - Gate mounting	1
55	129457	Spring - Lens retaining	1
55	129458	Catch - Film gate	1
34	129461	Spring - Loop former	1
33	129463	Roller - Loop former	1
34	129464	Pivot - Loop former	1
33	129465	Handle - Loop former	1
34	129467	Anchor - Loop former spring	1
49	*129870	Screw - Mach, Phillips pan hd, steel, black oxide, 2-56 x 5/64; Pressure pad spring adjusting	1
34	130179	Loop Former Arm and Shaft Assembly	1
17	130298	Stud - Drive belt guide	1
11	130299	Guide - Drive belt	1
71	130610	Connector - Take-up arm grounding	1
56	131363	Spring - Tension adjusting	1
24	131369	Actuator - Clutch	2
26	131371	Bracket - Shifting lever latch mounting	1
26	131375	Pivot - Shifting lever latch	1
26	131376	Reverse Shift Lock Assembly	1
16	131379	Knob - Speed changing	1
16	131380	Plate - Speed indicator	1
16	131381	Spacer - Speed plate	2
16	131382	Screw - Mach, miniature hd, steel, semibright nickel, 2-56 x 1/4; Speed plate to mechanism housing	2
11	131395	Pulley - Motor drive	1
12,78	131433	Screw - Mach, Phillips electrical binding hd, brass, 6-32 x 3/16; Motor starting relay terminal	3
54	131544	Spring - Tension roller	1
36	*131545	Setscrew - Hex socket hd, oval point, steel, semibright nickel, 4-40 x 5/8; Azimuth adjusting	1
33	131546	Spring - Pressure roller	1
30	131558	Record Head Shaft and Pin Assembly	1
54	131561	Lower Sprocket Plate and Pins Assembly	1

* Standard parts except for finish

FIG.	PART NO.	PART NAME	REQD.
52	131562	Lower Sprocket Plate Assembly	1
25	131563	Tension Clutch and Bushing Assembly	1
25	131564	Clutch Bracket and Stud Assembly	1
38	131567	Magnetic Head Switch Arm Assembly	1
40,78	131568	Magnetic Head Selector Switch Assembly	1
37	131569	Erase Head Retracting Assembly	1
68	131574	Pawl Plate and Pin Assembly	1
67	131575	Take-Up Reel Support Arm Assembly	1
1	131576	Exciter Lamp Cover Assembly	1
75	131595	Magnetic Sound Head Amplifier Cable Assembly	1
24,78	131598	Magnetic Sound Head Projection Cable Assembly	1
32	131599	Sprocket and Pawl Assembly	1
33	131616	Braking Spring and Button Assembly	1
57	131644	Pin - Belt guard actuating	1
71	131645	Take-Up Arm Mounting Bracket Assembly	1
14	132024	Drive Belt Assembly	1
21,78	132029	Amplifier Power Cable Assembly	1
35	132034	Exciter Lamp Contact Cover Assembly	1
36	132036	Sound Optics Bracket Assembly	1
35	132038	Cam - Exciter lamp releasing	1
43	132062	Nut - Shutter shaft	1
59	132111	Knob - Threading	1
75,77	132136	Condenser - Ceramic, .005 mfd ± 10%, 500 VDC, Muter Type 38 T137 Durez V. I. or equiv	1
75,77	132137	Condenser - Ceramic, .001 mfd ± 10%, 500 VDC, Muter Type 10T137 Durez V. I. or equiv	1
75,77	132138	Condenser - Ceramic, 500 mmfd ± 10%, 2,000 VDC, Muter Type 1/2 HK3 Durez V. I. or equiv	1
75,77	132139	Condenser - Ceramic, 50 mmfd ± 10%, 500 VDC, Muter Type 10N750 Durez V. I. or equiv	2
75,76,77	132140	Condenser - Ceramic, 100 mmfd ± 10%, 500 VDC, Muter Type 10T137 Durez V. I. or equiv	2
75,76,77	132141	Condenser - Ceramic, .002 mfd ± 10%, 500 VDC, Muter Type CC63-HK10-2000-10	2
75,77	132142	Condenser - Ceramic, .01 mfd ± 20%, 500 VDC, Muter Type 3/4 HK7 Durez V. I. or equiv	3
75,77	132146	Resistor - Fixed, composition, 270 ohms ± 10%, 1 watt, insulated	1
75,77	132147	Resistor - Fixed, composition, 330 ohms ± 10%, 1/2 watt, insulated	1
75	132148	Tube - 6CM6, RCA, Sylvania or equiv	2
75	132149	Strip - Terminal, 5 lug, Cinch No. 1542-A or equiv	1
76,77	132150	Resistor - Fixed, composition 2.2 meg ± 10%, 1/2 watt, insulated	1
75,77	132153	Rheostat - Bias, Muter Type A 3 ohm sensitivity control	1
73	132154	Washer - Spring; Switch locking plate	1
73	132155	Spacer - Selector switch lock	1
63	132156	Bracket - Microphone mounting	1
63	132157	Screw - Microphone mounting	1
63	132160	Microphone Cord Strap Assembly	1
78	132165	Terminal - Motor connector	1
11,78	132166	Connector - Motor	2
75	132168	Ring - Clamping; Input transformer	1
19	132170	Phototube Case Cover and Cable Assembly	1
12	132729	Insulator - Reversing switch cover	1
12	132730	Cover - Reversing switch	1
21,78	132732	Panel - Control switch	1
13	132735	Motor Mounting Bracket and Shield Assembly	1
9	132738	Clamp - Magnetic sound head projection cable socket	1
9	*132739	Screw - Tapping, Type B, Phillips pan hd, steel, semibright nickel, No. 8 x 5/8; magnetic sound head projection cable socket clamp	1
22	133282	Safety Arm and Hub Assembly	1

* Standard parts except for finish

FIG.	PART NO.	PART NAME	REQD.
69	136280	Bushing - Elevating mechanism locking release	1
70	136281	Release - Elevating mechanism locking	1
29	137056	Socket - Record and erase head	1
12,78	137268	Motor Starting Relay with screws	1
18	137269	Belt Shifting Lever and Pin Assembly	1
75	137270	Amplifier Complete, Less Tubes	1
27	137271	Magnetic Head Assembly with Fasteners	1
28	*137272	Screw - Mach, Phillips pan hd, steel semibright nickel, 10-32 x 1-3/8; Magnetic head assembly holding	1
72	137273	Key - Selector switch lock	1
50	137790	Stripper - Film	1
71	137814	Elevating Mechanism Bar Assembly	1
74	137833	Damper - Tube, Canfield snap-in bumper Cat. No. 10573	1
74	137834	Support - Tube damper	1
76,77	137835	Condenser - Ceramic, 250 mmfd ± 10%, 500 VDC, Muter Type CC61-HK11-250-10 or equiv	1
75,77	137836	Condenser - Ceramic, .02 mfd ± 20%, 500 VDC, Muter Type CC64-HK10-(2)-.02-20 or equiv	3
76,77	137865	Resistor - Fixed, composition, 6.8 meg, ± 10%, 1/2 watt, insulated	1
78	138022	Sleeving - Insulating; Reversing switch	2
75,77	138139	Control - Exciter lamp	1
37	138141	Shield - Pickup rod	1
48	138142	Baffle - Vent slot	1
48	138144	Aperture Plate Assembly	1
47	138145	Aperture Plate and Pressure Pad Assembly	1
65	138147	Stop - Sound drum shaft	1
75	138148	Terminal - Resilient–1, Grounding–1	2
63	138150	Strap - Manual	1
63	138151	Staple - No. 8 double-pointed tack; Manual strap	2
53	138158	Roller - Sprocket	1
51	138159	Roller - Upper front sprocket	2
53	138160	Roller - Lower front sprocket	1
50	138161	Upper Sprocket Plate Assembly	1
23	138220	Washer - Insulating; Phototube case	2
68	138221	Washer - Take-up pulley lubricating	1
38	138228	Washer - Switch arm retaining	1
1	138229	Washer - Amplifier mounting	3
75	138608	Sleeving - Insulating	1
75,77	138609	Condenser - Electrolytic, 40 mfd, 350 VDC, 15/16 diam, 85° C, Sprague Type DEE	1
3	138610	Name Plate - Fidelity	1
34,78,79	138614	Resistor - Fixed, composition, 10 ohms ± 10%, 1/2 watt, insulated	1
72	138615	Cable - Phono connector	1
1	138681	Knob - Selector switch–1, Head switch–1, Volume control–1, Phono control–1	4
2	138685	Amplifier Name Plate Assembly	1
13	138688	Grommet - Motor mounting	4
75	138782	Bracket - Condenser mounting	1
48	138792	Pressure Pad Assembly	1
74,75	138819	Clamp - Magnetic head amplifier cable	1
78	138842	Strip - Terminal, lug type	1
44	139480	Pad - Claw pivot (large)	1
44	139481	Pad - Claw pivot (small)	1
75	139609	Strip - Terminal, 6 lug	1
75	139610	Terminal - Solder	2
12	139611	Insulator - Motor relay	1
1	139612	Pointer - Switch	4
68	139890	Take-Up Pulley and Ratchet Assembly	1
32	140119	Screw - Flywheel shaft end	1

FIG.	PART NO.	PART NAME	REQD.
41	140133	Lockwasher - Spring, ASA, medium, steel, No. 6; Lamp ejector spring screw	1
72	140867	Loop - Sonotrack film (Boxed)	1
63	141014	Insulator - Speaker plug and receptacle	2
78	141015	Insulator - Motor connection terminal	1
41	142849	Washer - Spring; Lamp socket screw	2
55	142850	Screw - Lamp adjusting	1
74	143031	Cap - Red for warning light socket	1
74	143032	Cap - Clear for level indicator socket	1
15	801290	Lens - Condenser, front	1
75	805272	Tube - 6X4, RCA, Sylvania or equiv	1
74	805295	Lamp - Pilot, GE No. NE-51; Level indicator	1
63		Cable - No. 18AWG tinned copper stranded, vinyl plastic insulation, tinned copper braid shield, vinyl plastic jacket, max diam .145 in., 40 ft.; Speaker	AR
75		Cable - Tensolite Cat. No. 1628E-2, twisted 2 conductor cable No. 24 tinned copper conductors (16 x 36 stranding) and vinyl insulation 1 conductor blue and 1 conductor yellow; Input transformer	1
19		Cell - Photoelectric, Cetron CE-25-C	1
72		Connector - Amphenol 75-MCIF	1
22		Lamp - Photocell exciter, 7V, .2 amp, T-5 clear, double contact, candelabra prefocus base	2
14		Lamp - Projection, 750W, 115V, T-12 clear, C-13D filament, medium prefocus base	1
14		Lamp - Projection, 1000W (10-hour), 115V, T-12 clear, C-13D filament, medium prefocus base	AR
1		Lens - Kodak Projection Ektanon, 1½-inch, f/2.0	AR
1		Lens - Kodak Projection Ektanon, 2-inch, f/1.6	1
1		Lens - Kodak Projection Ektanon, 3-inch, f/2.0	AR
1		Lens - Kodak Projection Ektanon, 4-inch, f/2.5	AR
72		Microphone - Kodak, Model PA-4	1
72		Reel - Kodascope, 1600 ft., 16mm	1

KODAK DE LUXE SPEAKER UNIT, MODEL A

FIG.	PART NO.	PART NAME	REQD.
83	*23837	Nut - Hex mach screw, steel, semibright nickel, 10-32 NF-2B; Speaker to mounting board	4
81	76938	Clip - Reel	2
82	76939	Stud - Reel support	1
83	*85876	Washer - Plain, ASA, steel, semibright nickel, 1/4 ID x 9/16 OD x .065 thk; Speaker to mounting board—4, Speaker mounting board to case—4	8
85	88937	Plate - Bottom	2
81	*101602	Screw - Wood, Phillips rdhd, steel, semibright nickel, No. 8 x 5/8 in.; Brackets to case	8
81	*101673	Screw - Wood, Phillips rdhd, steel, semibright nickel, No. 3 x 3/8 in.; Reel clip	4
80	*102739	Hinge	2
80	102740	Rivet - Split; Case lock	12
80	*102742	Washer - Finishing; Support screws	8
80	102753	Rivet - Name plate to case	2
80	*102759	Screw - Wood, Phillips oval hd, brass, transparent lacquer, No. 6 x 1 in.; Support to case	8
82	104459	Washer - Reel support stud	2
80	105466	Lock - Case	3
83	*108541	Lockwasher - Internal tooth, steel, semibright nickel, No. 10; Speaker to mounting board	4
80	116389	Handle	1
85	117116	Pin - Handle	2

* Standard parts except for finish
AR Signifies As Required

KODAK DE LUXE SPEAKER UNIT, MODEL A

FIG.	PART NO.	PART NAME	REQD.
85	117117	Plate - Top	2
81	120451	Plug - Jones Type P304 CCT with screws 5/16 in. lg; Speaker	1
85	120591	Post - Handle and suspension	4
	120598	Nut - Speaker mounting board	4
80	120606	Foot	4
80	*120607	Rivet - Foot	4
80	120626	Spot - Kodak, 2 in. diam	1
83	*122787	Screw - Mach, Phillips pan hd, steel, semibright nickel, 10-32 x 7/8 in. NF-2A; Speaker mounting board to case—4, Speaker to mounting board—4	8
85	123639	Spring - Handle	2
80	125983	Case Assembly	1
84	125988	Screen	1
84	125989	Pad - Screen	4
83	126009	Speaker - 12 in., 6-8 ohm voice coil	1
83	126010	Pad - Speaker mounting board	2
80	126032	Rivet - Hinge	8
84	126033	Screw - Wood, Phillips rdhd, steel, No. 4 x 3/8 in.; Screen to case	8
82	126672	Screw - Mach, Phillips pan hd, steel, 8-32 x 1-1/4 in. NF-2A; Reel support stud to support	1
81	126674	Bracket - Speaker cord	4
80	126675	Name Plate	1
		Cable - Type SV, rubber insulation, black rubber jacket No. 18AWG, two conductor, black and white, stranding 41 of No. 34, 75 ft; Speaker	AR

KODAK 35-FT SPEAKER EXTENSION CORD

FIG.	PART NO.	PART NAME	REQD.
86	120451	Plug - Jones Type P304 CCT with screws 5/16 in. lg; Speaker	1
86	122550	Socket - Jones Type S304 CCT with screws 5/16 in. lg	1
		Cable - No. 18AWG tinned copper, single conductor, stranded 41 No. 34 vinyl plastic insulation; tinned copper braid shield; vinyl plastic jacket; overall diam .135 in., 35 ft; Speaker	AR

* Standard parts except for finish
AR Signifies As Required

EASTMAN KODAK COMPANY
Rochester 4, New York

Printed in the United States of America